Poly-Classic® Composite Railing Installation Instructions

Poly-Classic Composite Railing Systems come in three styles: **Colonial, Craftsman,** and **Craftsman Over The Post** (OTP), and in either **level** or **stair** (raked) systems.

Newel post attachment methods differ for level or stair installations. Not all instructions in this document may be needed for your application.

Contents:

Newel Post installation for LEVEL railing 2-5
Newel Post installation for STAIR railing 6-9

Craftsman Rail installation for LEVEL railing 10-13
Craftsman Rail installation for STAIR railing 14-17

Craftsman OTP Rail installation for LEVEL railing 18-23
Craftsman OTP Rail installation for STAIR railing 24-31

Colonial Rail installation for LEVEL railing 32-35
Colonial Rail installation for STAIR railing 36-39

LEVEL NEWEL POST INSTALLATION INSTRUCTIONS

Tools Required

- Protective eye glasses
- Tape measure
- Variable speed drill/screwdriver
- Rotary hammer or hammer drill and a 1/4" to 5/16” masonry percussion bit. (for concrete installations)
- Drill bits 3/32”, 1/4”, 5/16”, 3/8”, 1/2"
- 3/8” x 3” Concrete Anchors/Fasteners (for concrete installations)
- Philips Driver and #2 Square Driver
- Wrench and 3/4” deep socket
- Level (min 24”) and small torpedo level
- Miter Saw
- Snap Line
- Quick Clamp
- (Christy’s™) PVC Glue

This installation guide is a recommendation for meeting most code requirements. Always check your local building codes before starting a project and for determining the acceptable installation practices of your area. Please read assembly instructions completely before beginning construction. Always wear protective goggles & gloves when installing a composite railing system.

Layout

The Composite Railing Systems are designed for posts sets of either 72” (6 feet) or 96” (8 feet) between posts . The composite rail and aluminum inserts (when required) can be trimmed to shorter lengths using a miter saw. When trimming of the rails is necessary, equal amounts should be cut from both ends of the rails in order to maintain equal spacing from the outer picket and the adjacent posts.

Determine ahead of time if the post will be anchored to the top of the deck substructure, bolted to the inside of the deck joists, or anchored to concrete. It is best to do a sketch of the general layout in order to plan for post locations and any adjustments to rail lengths. Check measurements for accuracy prior to beginning the project. Determine locations of all line and corner posts. These need to be located inside the joist as shown in the drawing below.

Measure each side of the deck so that line posts are spaced as evenly as possible between the corner posts. Remember that the outside dimensions of the composite posts are 4”, unlike wood, which could be 3 1/2” to 3 5/8”. Also check the structural members below the deck to be sure there is no interference with the mounting brackets. If necessary, adjust the post locations. (Designing your railing so the wood posts are against a floor joist will simplify installations.) After determining the location of the posts, install the corner posts first.

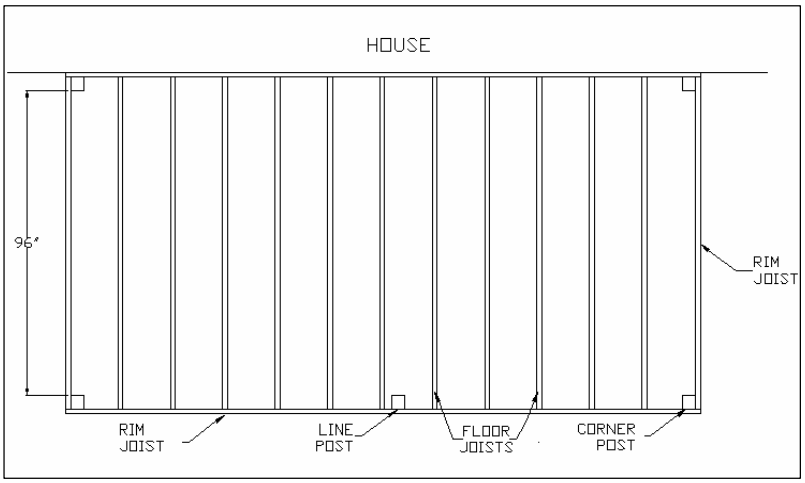

Side Mount Post Bracket

The metal mounting bracket is designed for both corner post and line post installations for 36” high rail systems on 1 and 2 family dwellings. The line post mounting bracket requires both the LEFT and RIGHT parts. For the corner posts, use the LEFT part only.

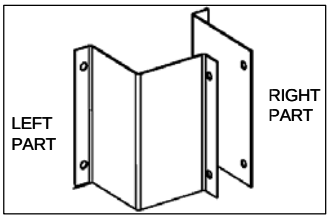

1) To install a corner post, attach the metal mounting bracket with the tab stop at the bottom to the rim joist at the corner of the deck. Pre-drill using a 3/8” inch drill bit. Use 3/8” x 2 1/2” carriage bolts and a socket wrench to attach the brackets to the inside of the rim joist. Do not tighten bolts completely at this point. Note: Use large washers against the wood for a secure installation. The bracket should be flush with the top of rim joist.

2) Insert the corner posts into the brackets and make sure they are level, plumb, and square. Verify that all the corner posts are the same height from the top of the deck surface. Tighten all bolts and check again to be sure posts are level.

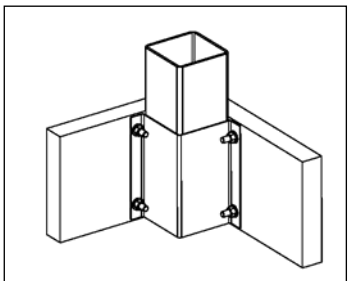

Corner Post Installation

3) Once the corner posts are in place, string a line from the top of one corner post to the next. Install the line post bracket, using the entire mounting bracket as provided, but do not tighten. Next, set the line posts in place and mark where the string line crosses the post. Remove the posts and cut along the line you just marked. Replace the cut line posts and tighten the brackets using the same method.

   (Note: If using post trims, cut the plastic tabs at the 90 degree bend and slide the trim pieces over the posts)

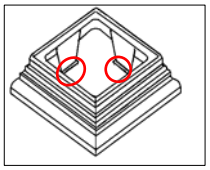

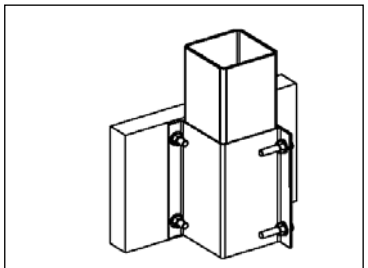

Line Post Installation

Post Tower (Concrete and Wooden Decks)

The surface mount tower system is designed for 4” x 4” composite posts in railing applications where the posts need to be mounted to a hard surface such as concrete, or this tower system can be used on wood decks when the substructure is modified as detailed at the end of this section. When installed as detailed below, composite posts using the post tower can meet post requirements for 42” high rail systems in residential applications.

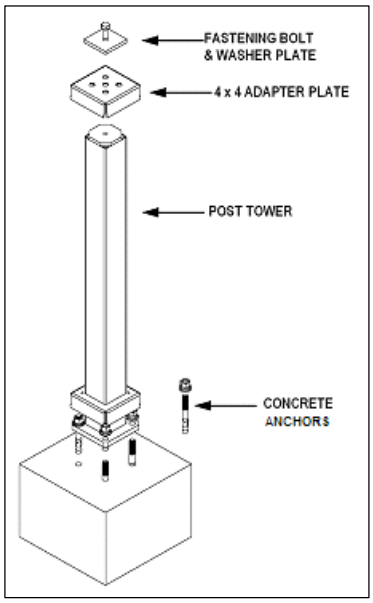

1) Lay out your post positions according to your railing design. You can use a chalk snap line to mark the railing line and centers of the post locations. Make sure to mark all post positions at least 5” from the edge of the concrete to reduce the chances of cracking the concrete when drilling holes for the concrete anchors.

2) Remove the tower assembly and bolt the top 4”x 4” adapter plate to the top of the tower in the configuration shown in the assembly drawing.

3) Using an adjustable wrench or vice grips, bend the flanges of the top and bottom adapter plates in on all sides so that the post will slide over the tower without damaging the post. Don't bend the tabs in too far as the post should not be able to slide off the tower.

4) Place the tower in the designated area on the concrete surface and mark the location of the four bolt holes. Make sure tower is centered over your post location marks.

5) Remove the tower. Using a masonry bit, drill four holes deep enough and large enough to accommodate the fasteners that you have chosen.

6) Place the tower back into the desired position. Make sure the tower is plumb using a level. If required, shim the tower base with stainless steel washers. Once level, secure to the concrete anchors.

7) Slide your posts over the tower and install the railing sections. (Note: If using a post trim, slide the trim piece over the post tower, then slide the post over the tower and into the trim piece)

When installing the tower on wooden decks the following modifications are required.

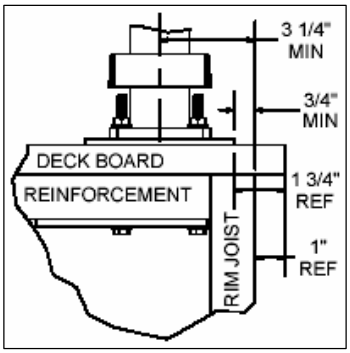

1) Lay out your post positions according to your railing design. You can use a chalk snap line to mark the railing line and centers of the post locations. Make sure to mark the post center line position at least 3 1/4" from the edge of the rim joist. The top plate must be a minimum of 3/4" from the rim joist so the bolts will clear the rim joist on the underside of the deck.

2) Install a piece of 2 x 8 treated lumber between the joists, under the deck boards where the tower is to be installed. Attach this reinforcement board to the rim joist and stringers. (Three screws should be used on each end.)

3) Thickness of the deck board and reinforcement board underneath should be a minimum of 2 1/2 inches actual thickness.

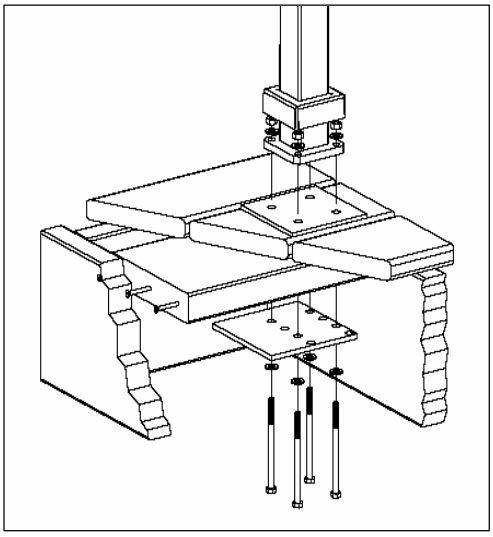

4) Take surface plate and use as a template. Mark the four corner holes for the (4**)** 5/16" x 4 1/2" threaded bolts.

5) Pre-Drill four 5/16" holes through the marked holes, drilling though the deck board and the reinforcement board.

6) Align the surface plate over the holes.

7) Take the second plate for underneath and drive the bolts up through the bottom plate, reinforcement board, deck board, surface plate, and tower mount.

8) Apply the washers and nuts. Tighten the bolts.

9) Bolt the top 4"x 4" adapter plate to the top of the tower in the configuration shown in the assembly drawing.

10) Using an adjustable wrench or vice grips, bend the flanges of the top and bottom adapter plates in on all sides so that the post will slide over the tower without damaging the post. Don't bend the tabs in too far as the post should not be able to slide off the tower.

11) Slide your posts over the tower and install the railing sections. (Note: If using a post trim, slide the trim piece over the post tower, then slide the post over the tower and into the trim piece.)

Sleeving a Wood 4 x 4 Post

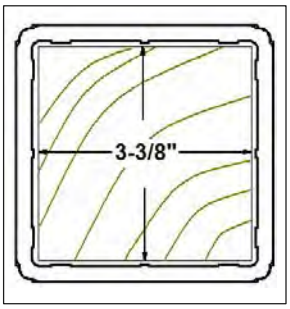

The composite post can be used to sleeve 4 x 4 wooden posts. When installed as detailed below, composite posts used as a sleeve can meet post requirements for 42” high rail systems in residential applications.

1) Designing your deck so the post spacing will end up with a stringer at each post will simplify installation. Lay out your post positions according to your railing design.

2) Trim treated post sides to 3-3/8” x 3-3/8”.

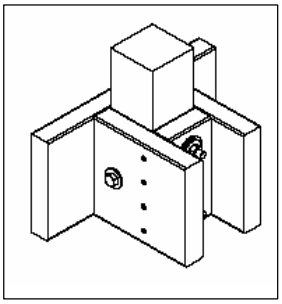

3) Temporarily attach the wood post in place. For corner post applications and where the post is against a stringer, add an additional stringer on the opposite side of the post. For line post applications, where the post doesn’t butt up against a stringer, add a stringer on each side of the post. If the stringers run across the deck, a cross stringer may be placed 24 inches from the rim joist. The additional stringer(s) attached to the post is then attached to the cross stringer. For all of the applications, add a cross member between the two stringers thus creating a structural box around the post. (Four screws should be used on each end when creating the structural box.)

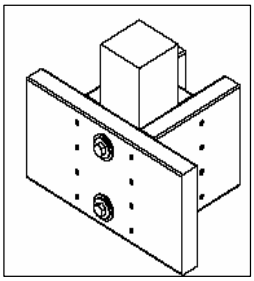

4) Drill two 1/2” holes through the rim joist, wood post, and back cross member 1 1/2” from the top and bottom of the rim joist. Drill one 1/2” hole through the wood post and the stringers on each side. This hole will be perpendicular to the two holes already drilled and should be in the middle of the stringers and post. **For ACQ lumber, all bolts, washers, and nuts must be galvanized.** The bolts through the rim joist have a 1/2” washer, then a 3/4” washer, which is against the wood. Insert bolts and place a 3/4” washer, 1/2” washer and nut on the bolt. The bolt through the stringers and post only has a 1/2” washer on each side. Tighten all bolts.

5) Slide your composite posts over the wood posts and install the railing sections. (Note: If using a post trim, slide the trim piece over the wood post, then slide the composite post over the wood post and into the trim piece)

STAIR NEWEL POST INSTALLATION INSTRUCTIONS

Tools Required

- Protective eye glasses
- Tape measure
- Variable speed drill/screwdriver
- Rotary hammer or hammer drill and a 1/4" to 5/16” masonry percussion bit. (for concrete installations)
- Drill bits 3/32”, 1/4”, 5/16”, 3/8”, 1/2", 11/16”
- 3/8” x 3” Concrete Anchors/Fasteners (for concrete installations)
- Philips Driver and #2 Square Driver
- Wrench and 3/4” deep socket
- Level (min 24”) and small torpedo level
- Miter Saw
- Snap Line
- Quick Clamp
- (Christy’s™) PVC Glue

This installation guide is a recommendation for meeting most code requirements. Always check your local building codes before starting a project and for determining the acceptable installation practices of your area. Please read assembly instructions completely before beginning construction. Always wear protective goggles & gloves when installing a composite railing system.

Layout

The Composite Stair Rail Systems are designed for posts sets that are 62” between posts and/or a rail length of 72” between the posts. Stair systems are based off a standard 7-1l pitch. The composite rail and aluminum inserts can be trimmed to shorter lengths using a miter saw. When trimming of the rails is necessary, equal amounts should be cut from both ends of the rails in order to maintain equal spacing from the outer picket and the adjacent posts.

Determine ahead of time where the posts will be anchored at the top and bottom of the stair system. It is best to do a sketch of the general layout in order to plan for post locations and any adjustments to rail lengths. Check measurements for accuracy prior to beginning the project. Remember that the outside dimensions of the composite posts are 4”, unlike wood, which could be 3 1/2” to 3 5/8”. Also check the structural members below the deck and stair system to be sure there is no interference with the mounting brackets. If necessary, adjust the post locations. Stair post instructions are to be used for installing posts on the stairs, not horizontal landing areas. ***(If the top post of the stair system is mounted to the deck surface/substructure please refer to the composite horizontal post and railing instructions.)***

Post Tower (Concrete and Wooden Stair Systems)

The surface mount tower system is designed for 4” x 4” composite posts in railing applications where the posts need to be mounted to a hard surface such as concrete, or this tower system can be used on wood stair systems when the substructure is modified as detailed at the end of this section. When installed as detailed below, composite posts using the post tower can meet post requirements for 42” high stair rail systems in residential applications.

1) Lay out your post positions according to your stair rail design. Make sure to mark all post positions at least 5” from the edge of the concrete to reduce the chances of cracking the concrete when drilling holes for the concrete anchors.

2) Remove the tower assembly and bolt the top 4”x 4” adapter plate to the top of the tower in the configuration shown in the assembly drawing.

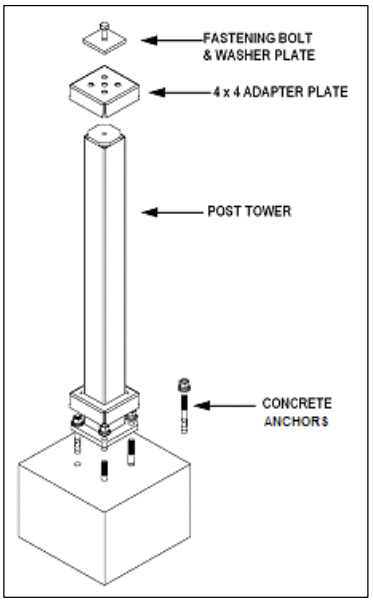

3) Using an adjustable wrench or vice grips, bend the flanges of the top and bottom adapter plates in on all sides so that the post will slide over the tower without damaging the post. Don’t bend the tabs in too far as the post should not be able to slide off the tower.

4) Place the tower in the designated area on the concrete surface and mark the location of the four bolt holes. Make sure tower is centered over your post location marks.

5) Remove the tower. Using a masonry bit, drill four holes deep enough and large enough to accommodate the fasteners that you have chosen.

6) Place the tower back into the desired position. Make sure the tower is plumb using a level. If required, shim the tower base with stainless steel washers. Once level, secure to the concrete anchors.

7) Slide your posts over the tower and install the railing sections. (Note: If using a post trim, slide the trim piece over the post tower, then slide the post over the tower and into the trim piece)

When installing the tower on wooden stair systems the following modifications are required.

1) Lay out your post positions according to your stair rail design. Make sure to mark the post center line position at least 3 1/4” from the edge of the outside rim joist/ stair stringers. The top plate must be a minimum of 3/4” from the stair stringer so the bolts will clear the rim joist/ stair stringer on the underside.

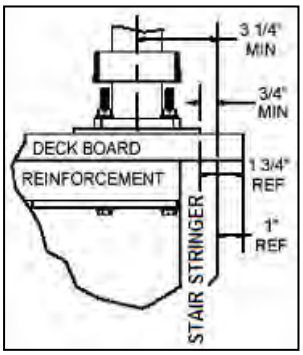

2) Install a piece of 2 x 8 treated lumber between the stringers, under the stair boards where the tower is to be installed. Attach this reinforcement board to the stair stringers. (Three to four #10 x 4” screws should be used on each end.)

3) Thickness of the deck board and reinforcement board underneath should be a minimum of 2 1/2 inches actual thickness.

4) Take surface plate and use as a template. Mark the four corner holes for the (4**)** 5/16” x 4 1/2” threaded bolts.

5) Pre-Drill four 5/16” holes through the marked holes, drilling though the deck board and the reinforcement board.

6) Align the surface plate over the holes.

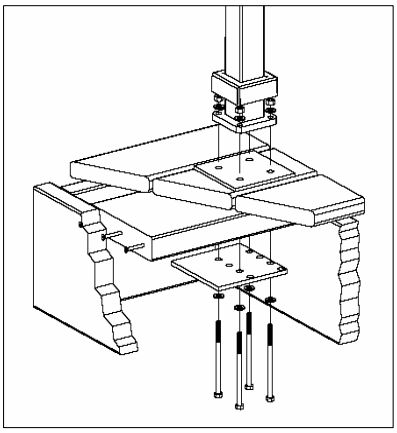

7) Take the second plate for underneath and drive the bolts up through the bottom plate, reinforcement board, deck board, surface plate, and tower mount.

8) Apply the washers and nuts. Tighten the bolts.

9) Bolt the top 4”x 4” adapter plate to the top of the tower in the configuration shown in the assembly drawing.

10) Using an adjustable wrench or vice grips, bend the flanges of the top and bottom adapter plates in on all sides so that the post will slide over the tower without damaging the post. Don’t bend the tabs in too far as the post should not be able to slide off the tower.

11) Slide your posts over the tower and install the railing sections. (Note: If using a post trim, slide the trim piece over the post tower, then slide the post over the tower and into the trim piece.)

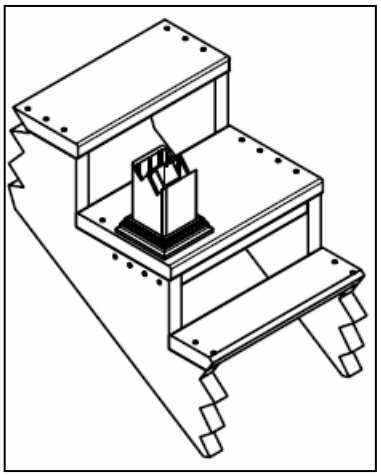

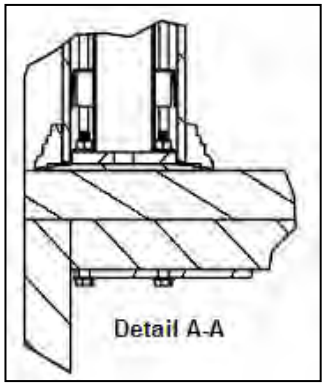

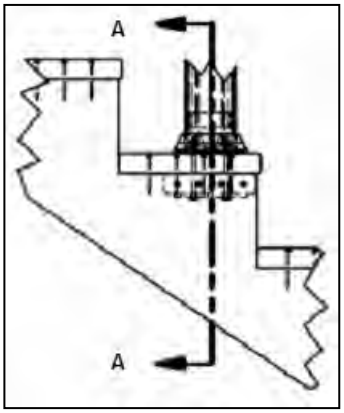

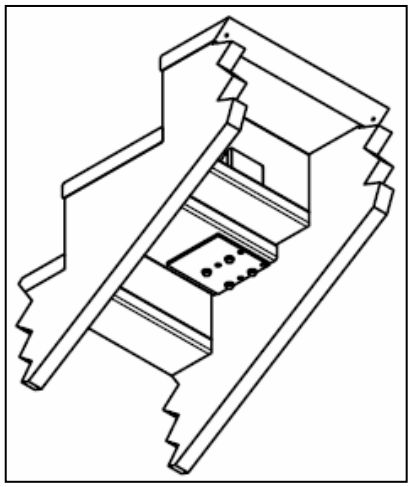

Sleeving a Wood 4 x 4 Post

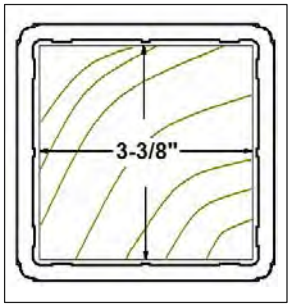

The composite post can be used to sleeve 4 x 4 wooden posts. When installed as detailed below, composite posts used as a sleeve can meet post requirements for 42” high stair rail systems in residential applications. *(Please refer to the composite horizontal post and railing instruction when mounting to the deck surface/substructure.)*

1) Lay out your post positions according to your stair rail design.
2) Trim treated post sides to 3-3/8” x 3-3/8”.
3) Temporarily attach the wood post in place
4) Drill two 1/2” holes through the outside stair stringer, wood post, and galvanized steel plate. These holes should be approximately 4” apart. Enlarge the two holes on the galvanized steel plate to 11/16”. The galvanized steel plate is 2 1/2” x 7” x 1/8”. This galvanized steel plate will need to be purchased from your local metal shop or hardware store.
5) Insert two 1/2” x 6” carriage bolts and place a 5/8” washer under the head of each bolt. At the free end of the bolt use a 5/8” and 1/2” washer before the nut. Tighten all bolts. **For ACQ lumber, all bolts, washers, and nuts must be galvanized.** Please see the drawings below for assistance and always check with your local code officials for requirements in your area.
6) Slide your composite posts over the wood posts and install the stair rail sections. (Note: If using a post trim, slide the trim piece over the wood post, then slide the composite post over the wood post and into the trim piece)

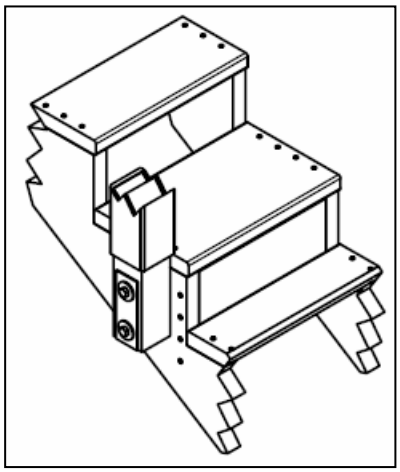

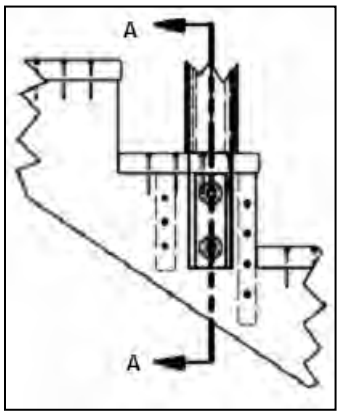
A
A

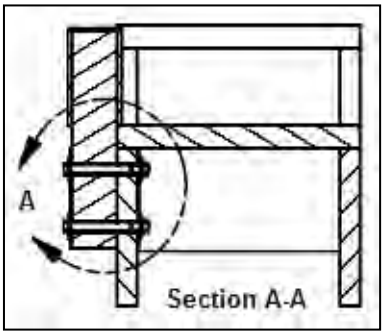
A
Section A-A

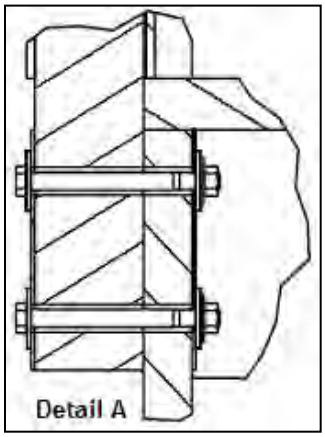
Detail A

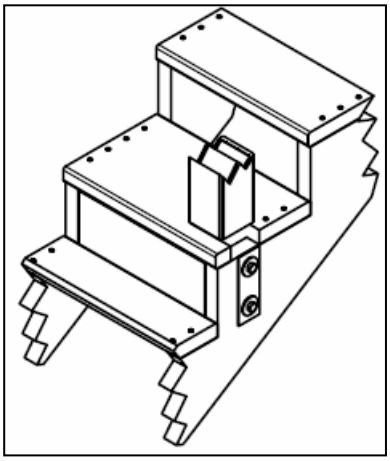

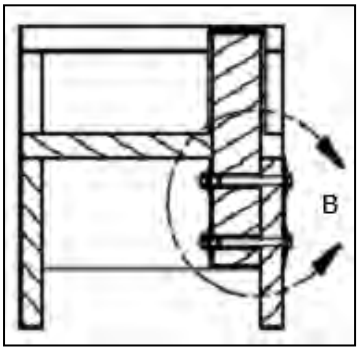
B

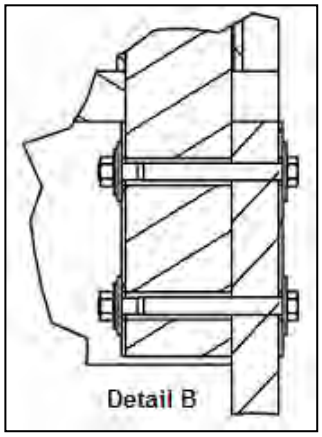
Detail B

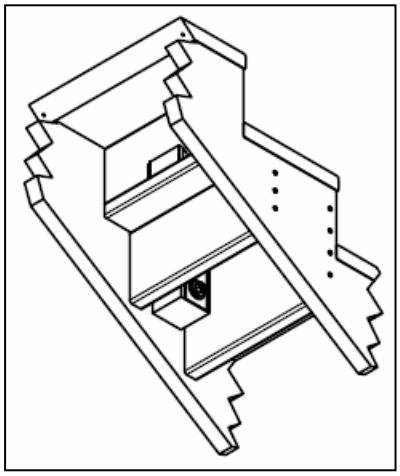

CRAFTSMAN LEVEL RAIL INSTALLATION INSTRUCTIONS

Always check your local building codes before starting a project. Please read assembly instructions completely before beginning construction. Always wear protective goggles & gloves when installing a composite railing system.

2” x 3 1/2” Composite Rail Components

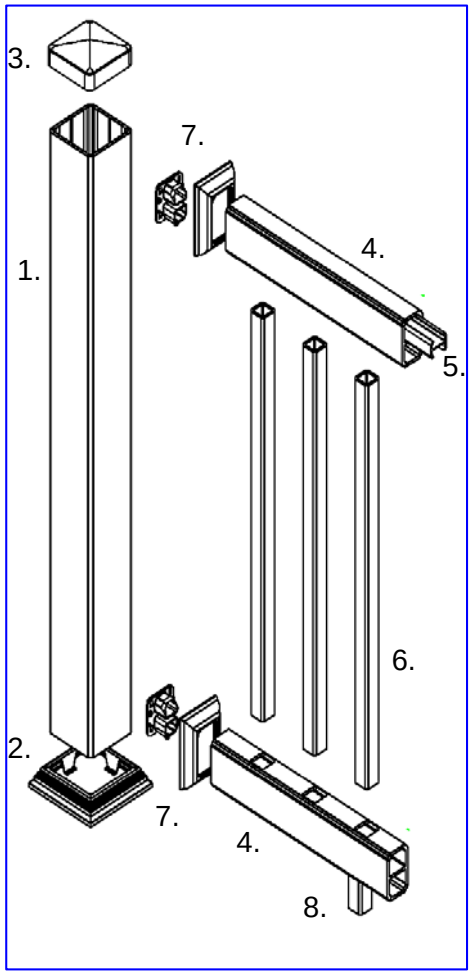

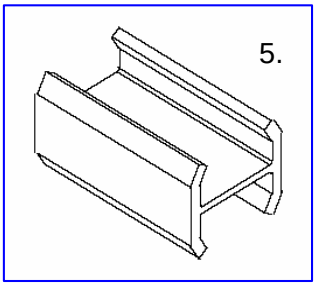

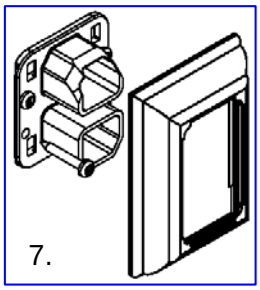

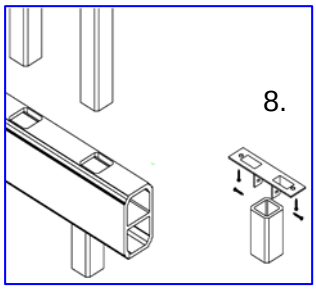

1. 4” x 4” Composite Post (Sold Separately)
2. 4” x 4” Post Trim (Sold Separately)
3. 4” x 4” Post Cap (Sold Separately)
4. 2” x 3 1/2” Composite Rail
5. 1 1/4” x 1 1/2” Aluminum Composite Insert
6. 1 1/4” x 1 1/4” Composite Pickets
7. 2” x 3 1/2” Composite Rail Bracket Kit
8. Foot Block Kit

Layout

Remember to check local building codes for rail height requirements in your area. The composite railing systems are designed to meet requirements for 36"& 42" high rail systems in residential applications. This is dependent on the post installation methods detailed in the preceding post installation instructions section.

The 2" x 3 1/2" rails run in between the posts and are set in brackets. An aluminum insert is required in the top rail for all applications. The bottom of the railing section is designed to be 2 1/2" above the surface. The foot block is a 1 1/4" x 1 1/4" picket inserted into a metal bracket that is attached to the bottom of the bottom rail.

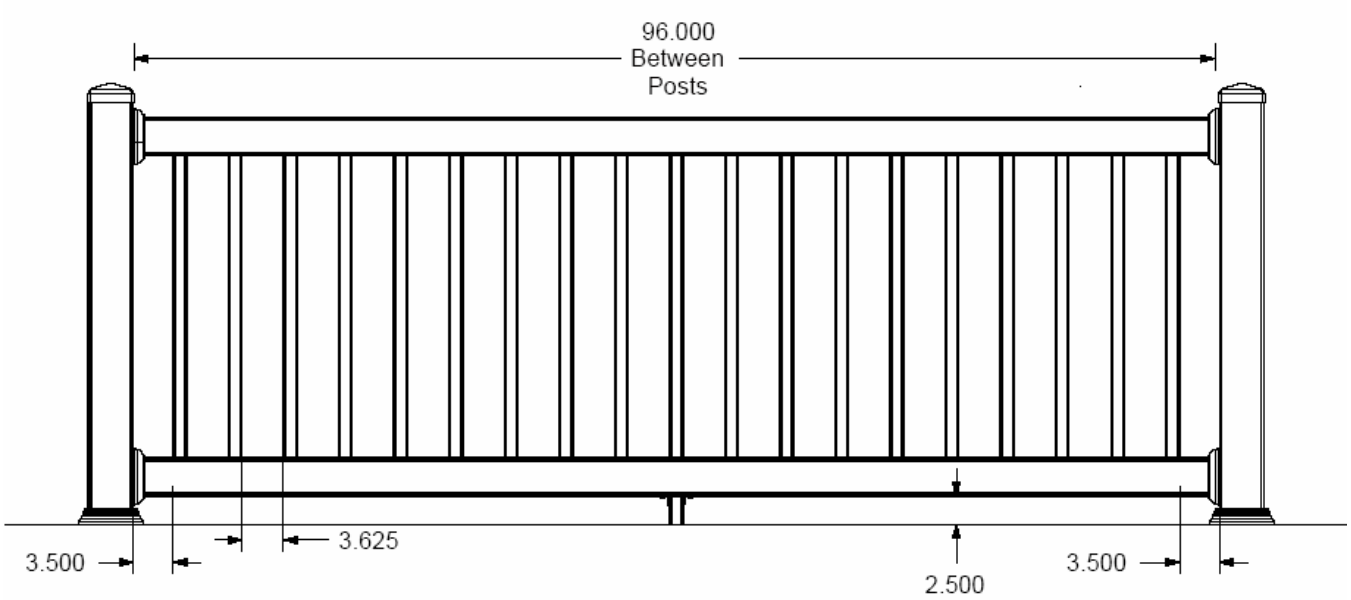

Rail Installation

1) **Cut Rails to Length.** Measure distance between posts and subtract 1/2" to allow room for the brackets (1/4" each end). Mark the rails to the calculated length using a square. ***Important: Make sure that there is equal spacing between the picket hole and end of rail to maintain uniform picket spacing. Do not leave an open picket insert hole at the bracket.*** Trim both ends of the rails. Trim the inserts to a length that is 2 1/2" inches shorter than the rails

2) **Install Trim Base.** If using a trim piece, be sure you install the trim base section over the posts before you start attaching the rail sections to the posts.

3) **Attach Foot-Block and Drill Weep Holes.** Cut foot-block picket to the length required for your installation. Attach the foot block bracket to the bottom of the bottom rail and foot-block picket to the bracket using the four screws included in the kit. **Foot block kits are required on all railing sections 6' or longer. When screwing into composite pre-drilling is always recommended.** Drill two or three evenly spaced 1/4" weep holes through the bottom of the bottom rail **and middle rib**. These holes will allow for proper water drainage.

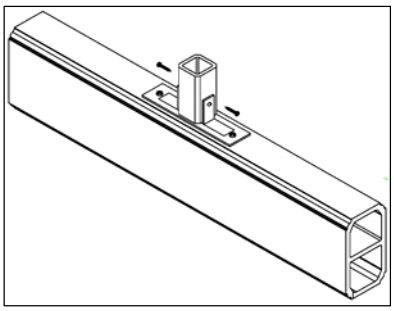

4) **Install Bottom Rail.** Slide trim pieces onto the bottom rail facing the finished trim towards the center of the rail. Insert the 2" x 3 1/2" brackets at both ends the bottom rail. Lower bottom rail (the rail with your weep holes) into position between posts. Make sure the holes for the pickets are facing up. Ensure the rail is level

and the bracket is centered on the post. Pre-Drill 3/32” holes into the post through the bracket holes and attach bracket to the post using screws provided in the kit. Snap trim in place.

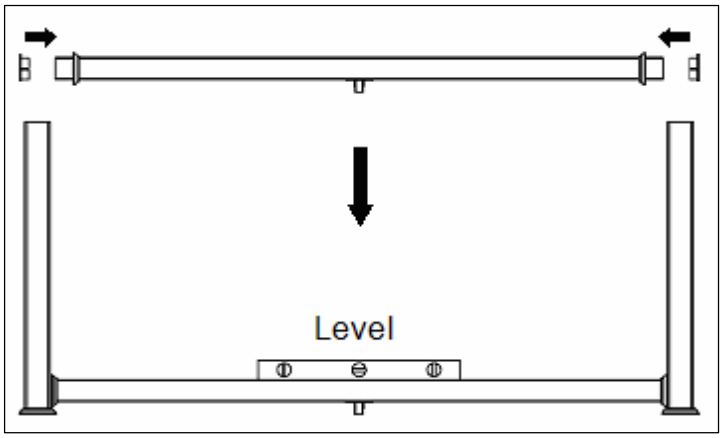

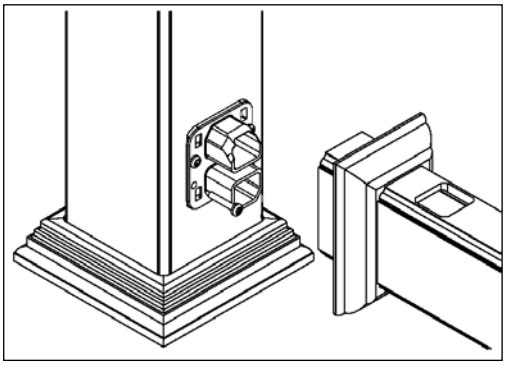

5) **Install Pickets and Top Rail.** Insert all the pickets into the bottom rail. Insert the aluminum insert into the top cavity of the top rail in the orientation shown below. Slide trim pieces onto the top rail facing the finished trim towards the center of the rail. Insert the 2” x 3 1/2” brackets at both ends the rail. Feed the rail onto the pickets. Once the top of the rail has been seated onto all the pickets and the rail is level, pre-drill 3/32” holes into the post through the bracket holes and attach bracket to the post using screws provided in the kit. Snap trim in place. (Note: For corner installations, pre-drill a 3/32”hole through the bottom of the bracket and the bottom part only of the top rail. Insert a screw through the bottom of the rail and bracket.)

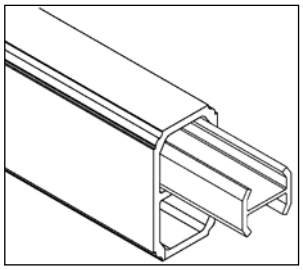

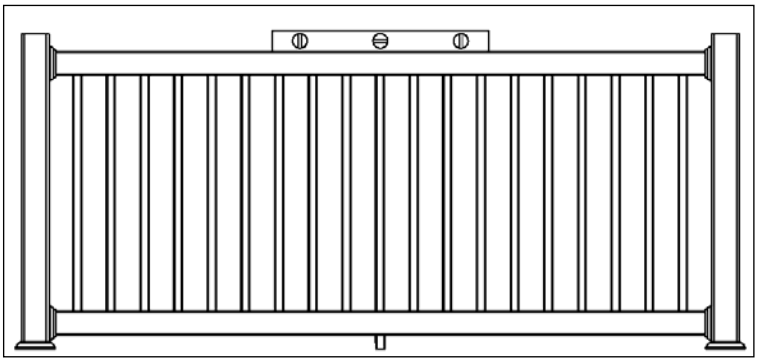

6) **Install Post Cap.** Place a 1” x 1/4” wide bead of glue on inside of cap along the center of all four sides. Slide cap onto top of post. The glue will smear as the cap is slid on the post and a permanent bond will take effect after a few minutes. Be careful not to drip glue on the outside of a post or cap or it will cause a “scar”.

Cleaning

Your composite railing system is manufactured using a blend of wood and plastic that binds the wood together and provides a coating around the individual wood fibers. An additional vinyl coat is applied to the surface to provide superior weather performance and color retention. For this reason and unlike traditional wood products, it is resistant to paints and penetrating stains. A mild detergent and water should be sufficient to keep the composite railing system looking new. For tough stains, Soft Scrub™ or baking soda works well. If stains or scuff marks appear, use a fiberglass cleaner/glaze or #0000 steel wool and Simple Green™. The surface can be sanded, and a fine sand paper (such as 200 grit) should be used, followed by 400 or 600 grit to polish and restore original finish.

Important

It is the responsibility of the contractor to meet or exceed all code and safety requirements, and to obtain all required building permits. These instructions are only a guide, and may not address every circumstance. The deck and railing installer should determine and implement appropriate installation techniques for each situation. Manufacturer shall not be held liable for improper or unsafe installations.

CRAFTSMAN STAIR RAIL INSTALLATION INSTRUCTIONS

Always check your local building codes before starting a project. Please read assembly instructions completely before beginning construction. Always wear protective goggles & gloves when installing a composite railing system.

2” x 3 1/2” Composite Stair Rail Components

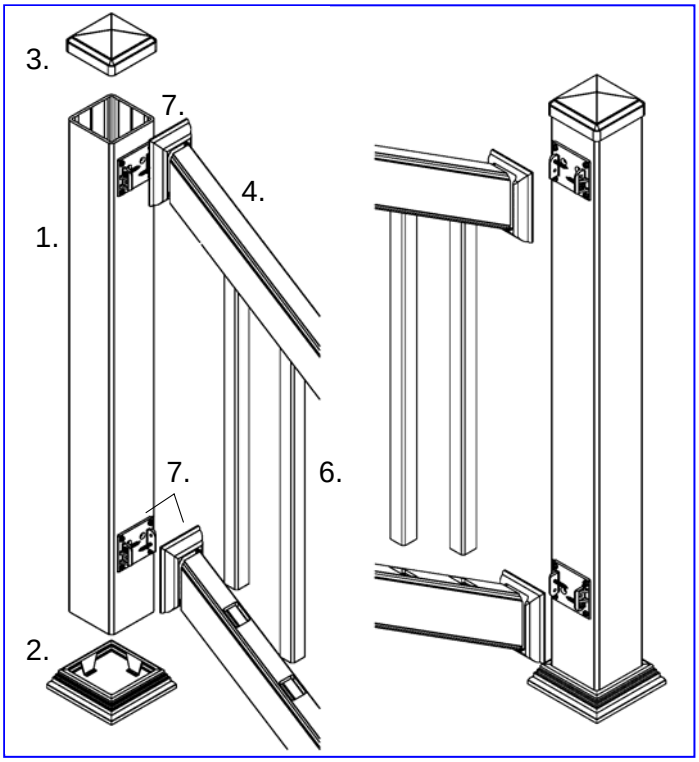

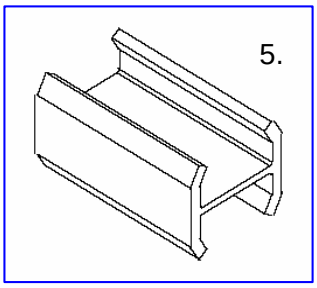

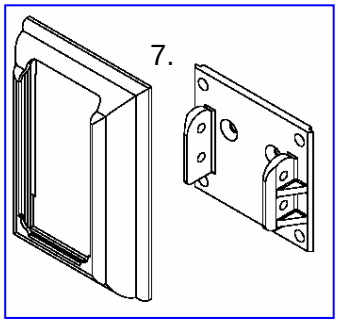

1. 4” x 4” Composite Post (Sold Separately)
2. 4” x 4” Post Trim (Sold Separately)
3. 4” x 4” Post Cap (Sold Separately)
4. 2” x 3 1/2” Composite Rail
5. 1 1/4” x 1 1/2” Aluminum Composite Insert
6. 1 1/4” x 1 1/4” Composite Pickets
7. 2” x 3 1/2” Composite Stair Rail Bracket Kit

Layout

Remember to check local building codes for stair rail height requirements in your area. The composite railing systems are designed to meet requirements for 36”& 42” high stair rail systems in residential applications. This is dependent on the stair post installation methods detailed in the preceding post installation instructions section.

The 2” x 3 1/2” composite stair rail system is designed for posts set 62” apart and/or a rail length of 72” between posts. The stair systems are designed to accommodate angles up to 35°. Aluminum inserts are required in both the top and bottom rails in this stair rail system.

The 2” x 3 1/2” rails run in between the posts and are set in brackets.

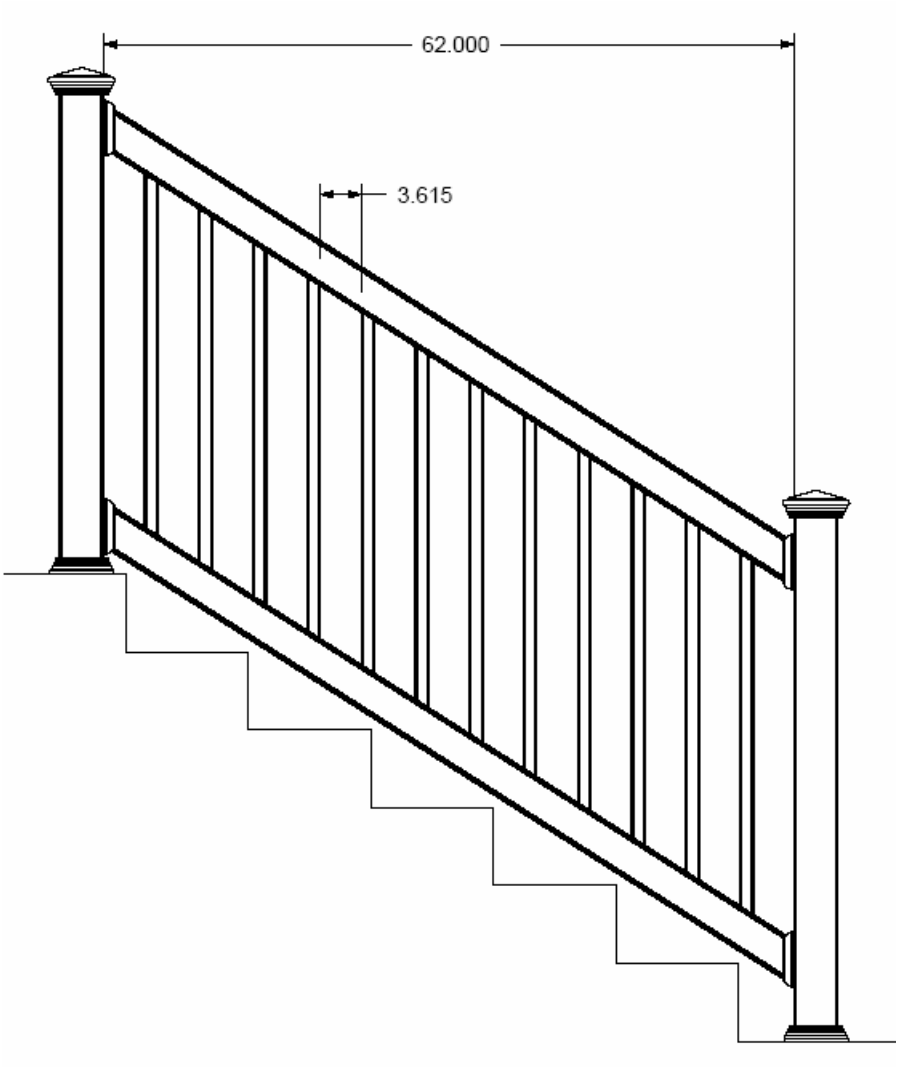

Rail Installation

1) **Determine Rail and Accessories Cut Angles.** To determine the cut angle at each end of your top and bottom rail, lay the rails on top of the stair steps with the rails centered between the posts. Mark the angle on each end of the rails, using the posts as a guide. ***It is imperative the posts are square and level***. Make certain the bottom rail is oriented with the routed holes up and top rail is oriented with the routed holes facing down. ***Important: Make sure that there is equal spacing between the picket holes and each end of rails/posts to maintain uniform picket spacing. Do not leave an open picket insert hole at the bracket.***

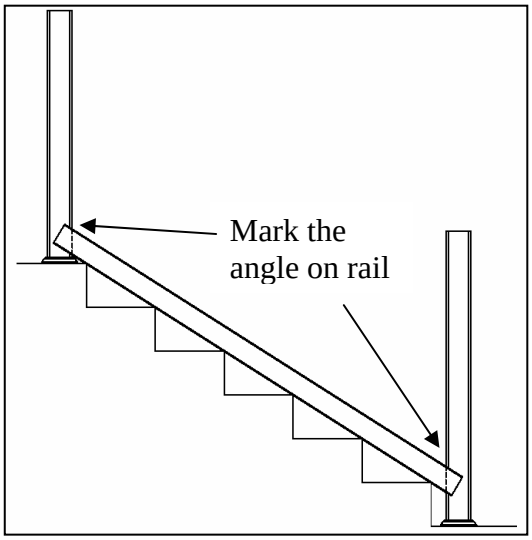

2) **Cut Rails and Accessories.** On both rails subtract 1/4" from each mark on each end to allow for the thickness of the mounting bracket. For the bottom rail, insert the 1 1/4" x 1 1/2" aluminum composite insert into the bottom cavity of the 2" x 3 1/2" rail and cut both the rail and insert at the marked angles on each end. For the top rail, insert the 1 1/4" x 1 1/2" aluminum composite insert into the top cavity of the 2" x 3 1/2" rail and cut both the rail and insert at the marked angles on each end. For both top and bottom rails, the inserts should be the same length as the corresponding rails.

3) **Install Trim Base.** If using a trim piece, be sure you install the trim base section over the posts before you start attaching the rail sections to the posts.

4) **Install Bottom Rail.** Slide the notched trim covers from the 2" x 3 1/2" stair rail bracket kit onto the bottom rail. Make sure the notch is facing up on the lower location of the rail and facing down at the upper location of the rail. Ensure the 1 1/4" x 1 1/2" aluminum insert is inserted into the bottom cavity of the 2" x 3 1/2" rail. Install the stair bracket base at both ends of the bottom rail. This is done by pre-drilling one 3/32" hole through the bottom side hole of the bracket into the rail. Drive one of the screws provided through the hole of the bracket into the rail. Make sure this screw goes into the metal insert. This will provide the mechanical attachment of the rail to the bracket. Lower bottom rail into position between posts. Make sure the holes for the pickets are facing up. Ensure the rail is at the correct angle and the bracket is centered on the post. You may need to place equal shims between two stair tread noses to elevate the bottom rail. Make sure you do not exceed code allowances for spacing in the "tread-rise triangle space". Pre-Drill 3/32" holes into the post through the bracket holes and attach bracket to the post using screws provided. Snap trim in place.

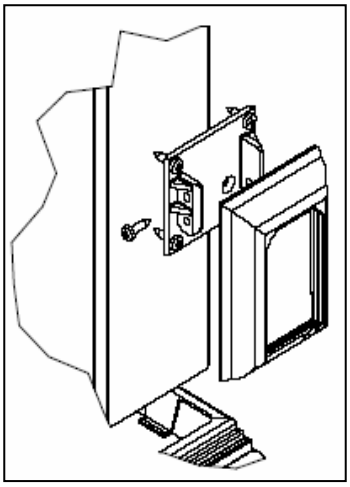

5) **Install Pickets & Top Rail.** Insert all the pickets into the holes in the bottom rail. Slide the notched trim covers from the 2” x 3 1/2” stair rail bracket kit onto the bottom rail. Make sure the notch is facing up on the lower location of the rail and facing down at the upper location of the rail. Ensure the 1 1/4” x 1 1/2” aluminum insert is inserted into the top cavity of the 2” x 3 1/2” rail. Feed the rail onto the pickets. Ensure the rail is at the correct angle, the bracket is centered on the post, and the pickets are plumb. Install the stair bracket base at both ends of the top rail. This is done by pre-drilling one 3/32” hole through the top side hole of the bracket into the rail. Drive one of the screws provided through the hole of the bracket into the rail. Make sure this screw goes into the metal insert. This will provide the mechanical attachment of the rail to the bracket. Once the top of the rail has been seated onto all the pickets and the rail is at the correct angle, pre-drill 3/32” holes into the post through the bracket holes and attach bracket to the post using screws provided. Snap trim in place.

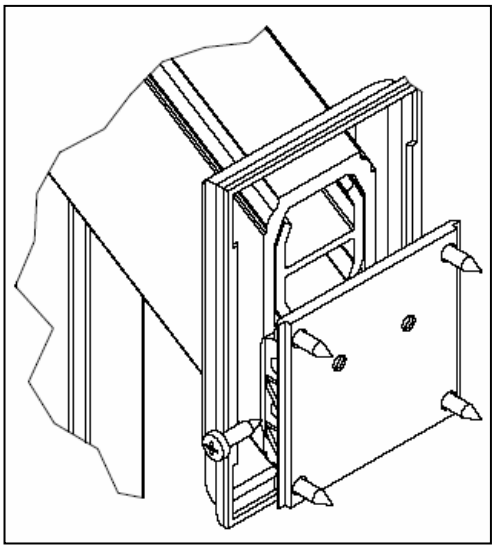

6) **Install Post Cap.** Place a 1” x 1/4” wide bead of glue on inside of cap along the center of all four sides. Slide cap onto top of post. The glue will smear as the cap is slid on the post and a permanent bond will take effect after a few minutes. Be careful not to drip glue on the outside of a post or cap or it will cause a “scar”.

Cleaning

Your composite railing system is manufactured using a blend of wood and plastic that binds the wood together and provides a coating around the individual wood fibers. An additional vinyl coat is applied to the surface to provide superior weather performance and color retention. For this reason and unlike traditional wood products, it is resistant to paints and penetrating stains. A mild detergent and water should be sufficient to keep the composite railing system looking new. For tough stains, Soft Scrub™ or baking soda works well. If stains or scuff marks appear, use a fiberglass cleaner/glaze or #0000 steel wool and Simple Green™. The surface can be sanded, and a fine sand paper (such as 200 grit) should be used, followed by 400 or 600 grit to polish and restore original finish.

Important

It is the responsibility of the contractor to meet or exceed all code and safety requirements, and to obtain all required building permits. These instructions are only a guide, and may not address every circumstance. The deck and railing installer should determine and implement appropriate installation techniques for each situation. Manufacturer shall not be held liable for improper or unsafe installations.

CRAFTSMAN OTP LEVEL RAIL INSTALLATION INSTRUCTIONS

Always check your local building codes before starting a project. Please read assembly instructions completely before beginning construction. Always wear protective goggles & gloves when installing a composite railing system.

1 1/4” x 4 1/2” Composite Top Rail Components

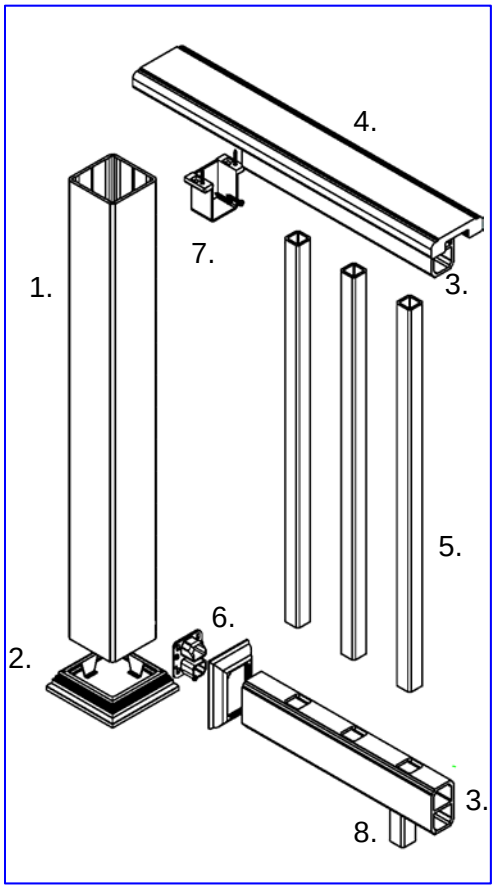

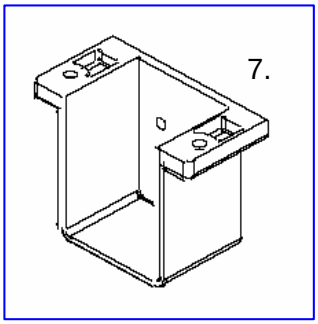

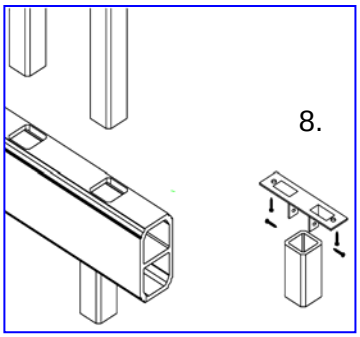

1. 4” x 4” Composite Post (Sold Separately)
2. 4” x 4” Post Trim (Sold Separately)
3. 2” x 3 1/2” Composite Rail
4. 1 1/4” x 4 1/2” Composite Top Rail (Sold Separately)
5. 1 1/4” x 1 1/4” Composite Pickets
6. 2” x 3 1/2” Composite Rail Bracket Kit
7. 1 1/4” x 4 1/2” Composite Top Rail Saddle Bracket Kit
8. Foot Block Kit

Layout

Remember to check local building codes for rail height requirements in your area. The composite railing systems are designed to meet requirements for 36"& 42" high rail systems in residential applications. This is dependent on the post installation methods detailed in the preceding post installation instructions section.

The 2" x 3 1/2" rails run in between the posts and are set in brackets. The 1 1/4" x 4 1/2" top cap rail can be installed on top or butted up against the posts. When installing the top rail over the post, continuous runs without splicing or in-line joints are recommended. When the top cap rail is butted up against the post, the corners need to be cut at 45°. The bottom of the railing section is designed to be 2 1/2" above the surface. The foot block is a 1 1/4" x 1 1/4" picket inserted into a metal bracket that is attached to the bottom of the bottom rail.

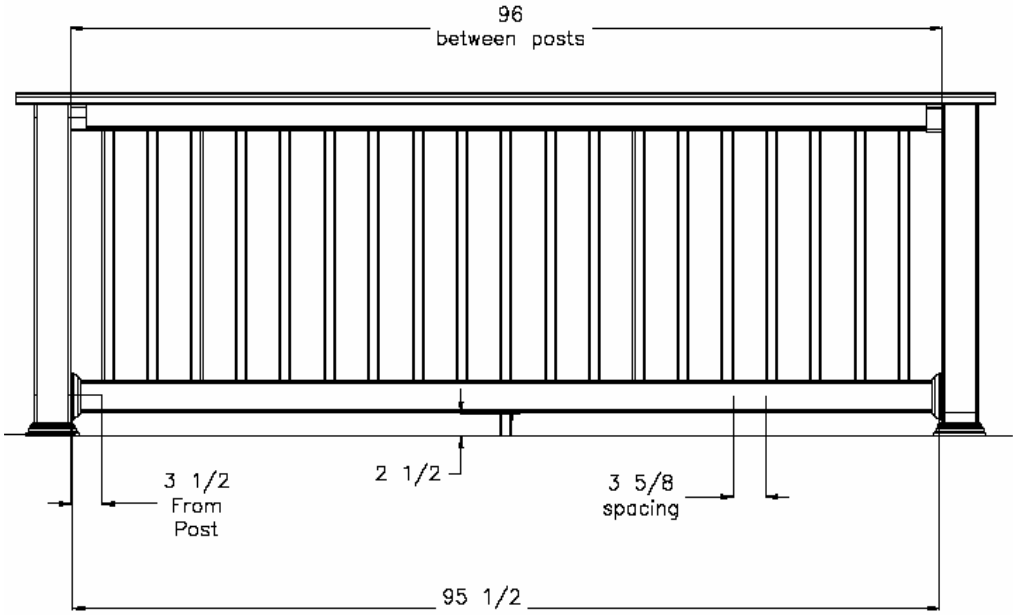

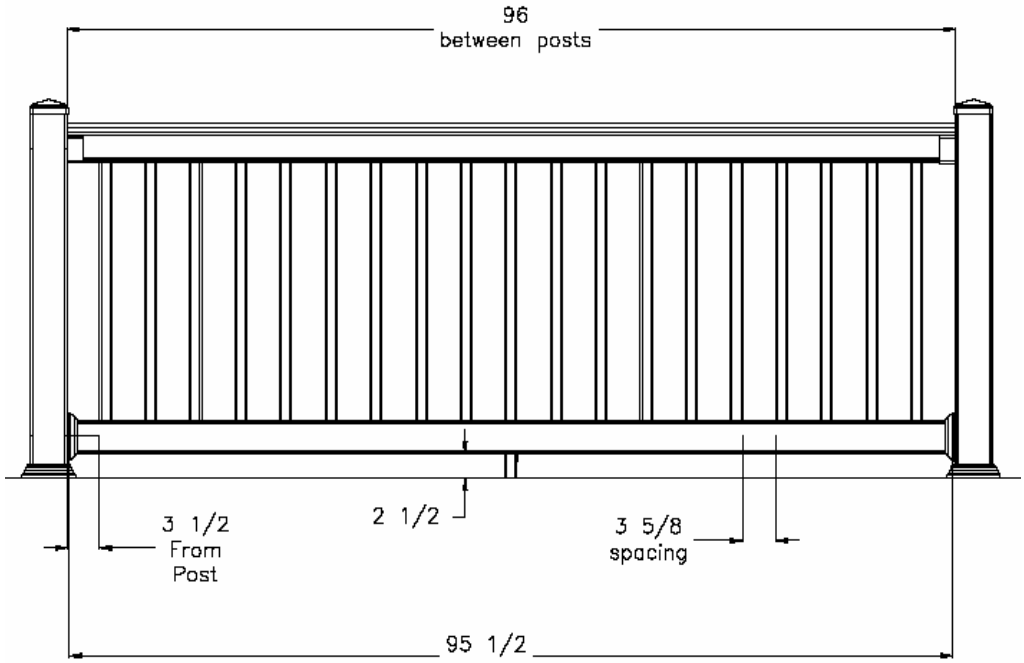

Rail Installation

1) **Cut Rails to Length.** Measure distance between posts and subtract 1/2” to allow room for the brackets (1/4” each end). Mark the rails to the calculated length using a square. ***Important: Make sure that there is equal spacing between the picket hole and end of rail to maintain uniform picket spacing. Do not leave an open picket insert hole at the bracket.*** Trim both ends of the rails. If running the top cap rail on top of the post, do not cut the top cap rail (Note: If the center rib in the 2” x 3 1/2” top rail interferes with the top screw of the attached saddle brackets trim an addition 1/8” off each end of the rail or file an 1/8” notch into the center rib on each end.)

2) **Install Trim Base.** If using a trim piece, be sure you install the trim base section over the posts before you start attaching the rail sections to the posts.

3) **Install Saddle Brackets**.

   a. **Top of Post Installation**: Align the saddle bracket with the top of the post. Center the bracket and mark the holes.

   b. **Butted Post Installation**: Locate the saddle bracket such that the top is 3-1/4” below the top of post. Center the bracket at this location and mark the holes.

   c. Pre-drill two 3/32” holes into the post through the holes in the bracket or via the marks made through the bracket holes. Attach brackets to post with two of the screws provided in the kit

4) **Assemble Rail Section with the 2” x 3 1/2” rails and pickets.** Lay rails and pickets out on a clean, non-abrasive surface and assemble section. Strap section together using bungee cords or strapping to keep section tightly assembled. Do not cover middle of the section.

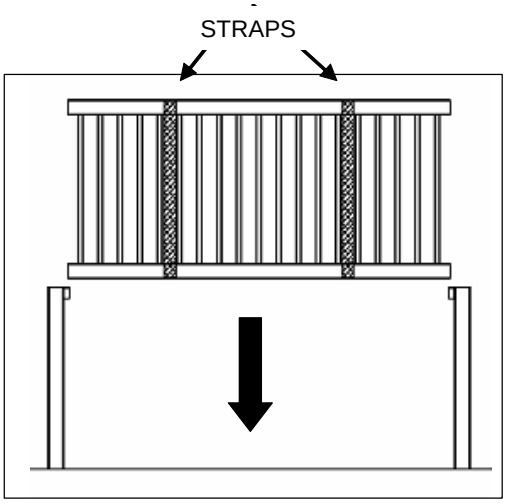

5) **Determine Foot-Block Length.** Hang assembled railing section in saddle brackets and measure the distance from the top of the deck to bottom of the bottom rail at the mid point.

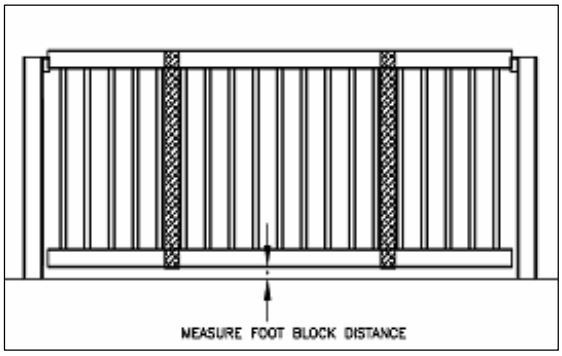

6) **Attach Foot-Block and Drill Weep Holes.** Remove the assembled railing section and place on a non-abrasive surface. Cut foot-block picket to the length required for your installation. Attach the foot block bracket to the bottom of the bottom rail and foot-block picket to the bracket using the four screws included in the kit. **Foot block kits are required on all railing sections 6' or longer. When screwing into composite pre-drilling is always recommended.** Drill two or three evenly spaced 1/4" weep holes through the bottom of the bottom rail **and middle rib**. These holes will allow for proper water drainage.

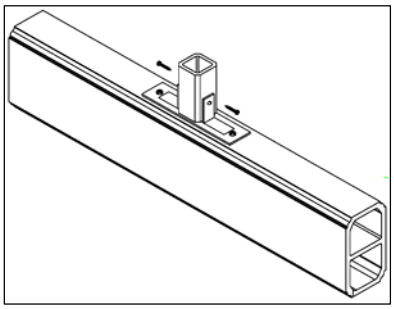

7) **Install Railing Section.** Slide trim pieces onto the bottom rail facing the finished trim towards the center of the rail and insert the 2" x 3 1/2" brackets at both ends of the bottom rail. Then, re-hang the assembled railing section into the saddle brackets. Pre-Drill 3/32" holes into the post through the bracket holes and attach bracket to the post using screws provided in the kit.

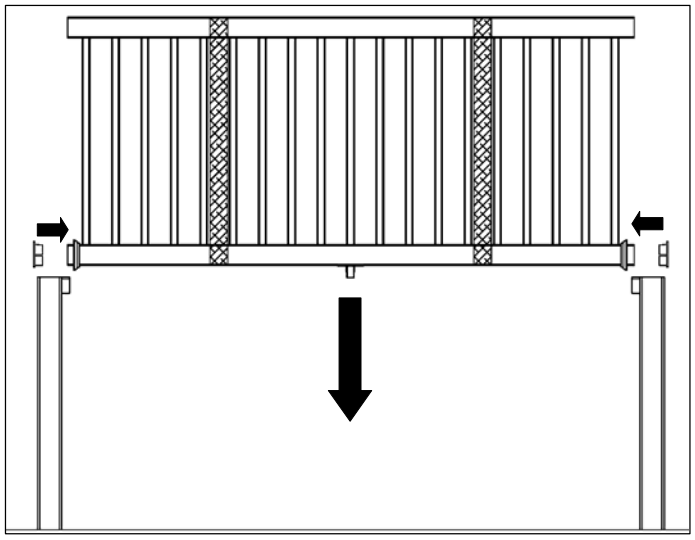

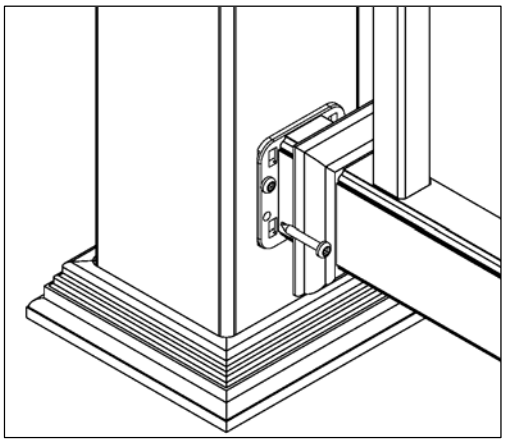

8) **Install Top Cap Rail.**

(Top of Post Installation): The top cap rail should be installed only after **all** of the 2" x 3 1/2" rail sections have been installed.

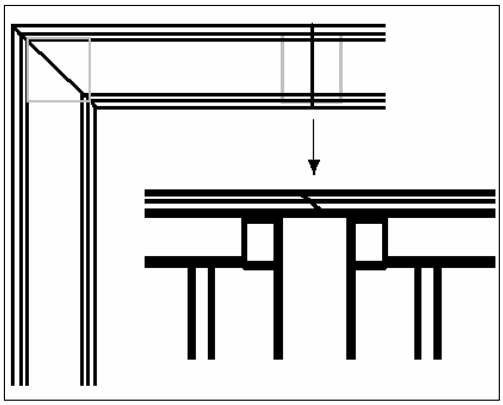

a. Measure and plan out how the top cap rails will be installed. When joining rails together 45° lap joints are recommended. All joints should occur on top of the posts. Splicing or in-line joints are <u>not recommended</u>. If necessary, do so as shown in the inset picture to the right. Joints should be sealed with glue or caulk and touch up paint can be used to cover any exposed material.

b. For end posts you can leave the rail open and paint the exposed end with matching touch-up paint or you can miter the end with an a short piece of the top rail. The short piece can be fastened with glue and a tapered head #10 screw or an angle bracket on the inside channels. (*Remember to pre-drill to prevent splitting.*)

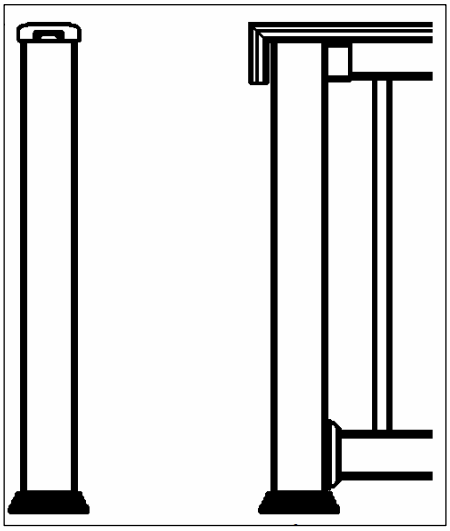

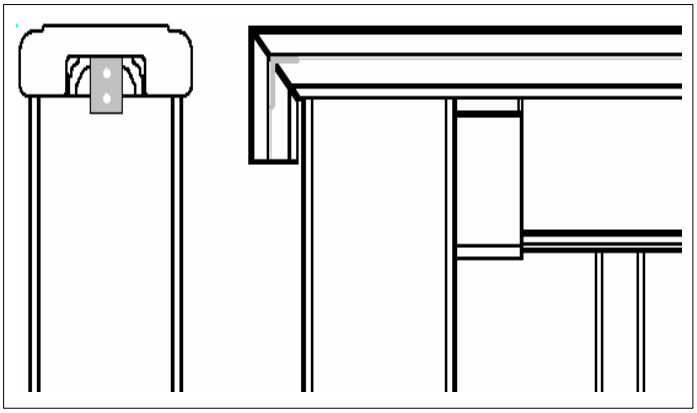

c. Lay out all the rails on top of the post to verify fit and make adjustments as required. Make sure that the top cap rails are centered on the post tops so as not to expose the top edge of the post.

d. Remove rails one at a time and apply a 1/8” bead of Christy’s™ glue down the center of the inside channel of the top cap rail. Place the rail on the top 2” x 3 ½” rail. Press down and slide rail back and forth slightly to distribute the glue and set it into the correct position.

e. Clamp top rail to 2” x 3 1/2” rail with quick-clamps in two places for at least three minutes to allow glue to set up.

f. Next pre-drill 1/8” x 1/4” deep holes through the counter bored holes in the top of the saddle bracket into the top rail. Be careful not to drill through the top of the rail. Secure the top rail to the bracket using the screws provided in the kit

g. Continue this process until all the rails are installed.

(Butted Post Installation): The top cap rail for this style can be installed one section at a time.

a. Measure the distance between posts on the top of the saddle bracket. Cut the top cap rail to this length.

b. Miter the corners of the cap rail. The exposed edges can be touched up with matching paint if desired.

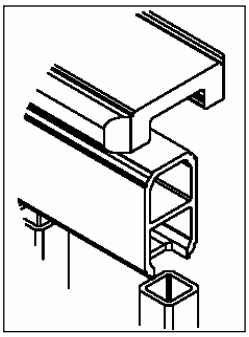

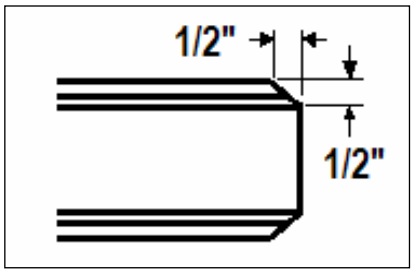

c. Lay out rails on top of the railing section and make adjusts as required.

d. Remove rail and apply a 1/8” bead of Christy’s™ glue down the center of the inside channel of the top cap rail. Place in the correct and centered position over the top 2” x 3 1/2” rail and press down to distribute the glue.

e. Next pre-drill 1/8” x 1/4” deep holes through the counter bored holes in the top of the saddle bracket into the top rail. Be careful not to drill through the top of the rail. Secure the top rail to the bracket using the screws provided in the kit

f. Clamp top rail to 2” x 3 1/2” rail with quick-clamps in two places for at least three minutes to allow glue to set up.

g. Continue this process until all the rails are installed.

9) **Install Post Cap (Butted-to-Post style only).** Place a 1” x 1/4” wide bead of glue on inside of cap along the center of all four sides. Slide cap onto top of post. The glue will smear as the cap is slid on the post and a permanent bond will take effect after a few minutes. Be careful not to drip glue on the outside of a post or cap or it will cause a “scar”.

Cleaning

Your composite railing system is manufactured using a blend of wood and plastic that binds the wood together and provides a coating around the individual wood fibers. An additional vinyl coat is applied to the surface to provide superior weather performance and color retention. For this reason and unlike traditional wood products, it is resistant to paints and penetrating stains. A mild detergent and water should be sufficient to keep the composite railing system looking new. For tough stains, Soft Scrub™ or baking soda works well. If stains or scuff marks appear, use a fiberglass cleaner/glaze or #0000 steel wool and Simple Green™. The surface can be sanded, and a fine sand paper (such as 200 grit) should be used, followed by 400 or 600 grit to polish and restore original finish.

Important

It is the responsibility of the contractor to meet or exceed all code and safety requirements, and to obtain all required building permits. These instructions are only a guide, and may not address every circumstance. The deck and railing installer should determine and implement appropriate installation techniques for each situation. Manufacturer shall not be held liable for improper or unsafe installations

CRAFTSMAN OTP STAIR RAIL INSTALLATION INSTRUCTIONS

Always check your local building codes before starting a project. Please read assembly instructions completely before beginning construction. Always wear protective goggles & gloves when installing a composite railing system.

1 1/4” x 4 1/2” Composite Top Rail Stair Rail Components

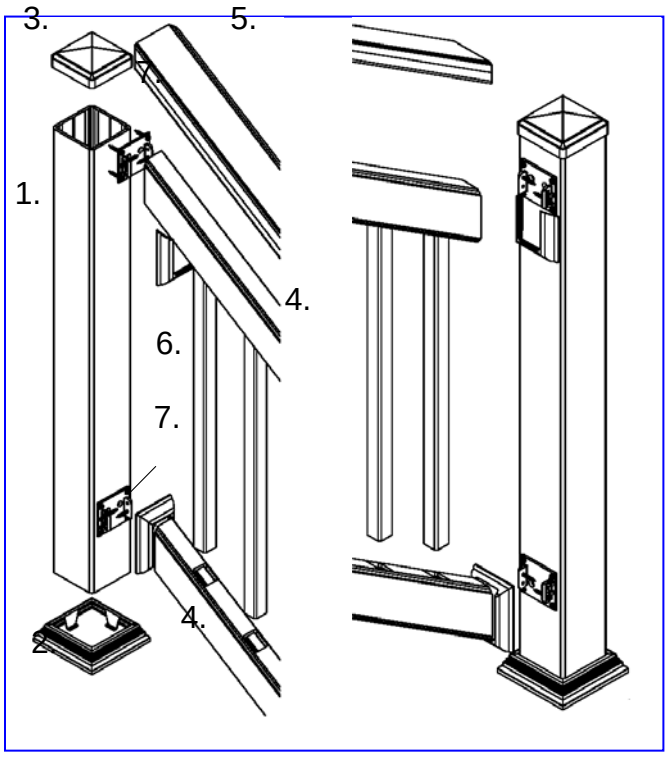

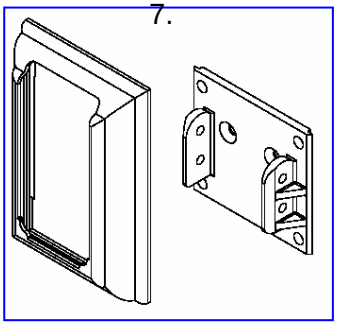

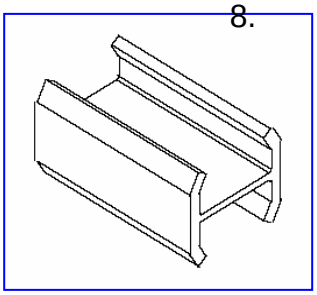

1. 4” x 4” Composite Post (Sold Separately)
2. 4” x 4” Post Trim (Sold Separately)
3. 4” x 4” Post Cap (Sold Separately)
4. 2” x 3 1/2” Composite Rail
5. 1 1/4” x 4 1/2” Composite Top Rail (Sold Separately)
6. 1 1/4” x 1 1/4” Composite Pickets
7. 2” x 3 1/2” Composite Stair Rail Bracket Kit
8. 1 1/4” x 1 1/2” Aluminum Composite Insert

Layout

Remember to check local building codes for stair rail height requirements in your area. The composite railing systems are designed to meet requirements for 36”& 42” high stair rail systems in residential applications. This is dependent on the stair post installation methods detailed in the preceding post installation instructions section.

The 1 1/4” x 4 1/2” composite top rail stair rail system is designed for posts set 62” apart and/or a rail length of 72” between posts. The stair systems are designed to accommodate angles up to 35°. Aluminum inserts are required in both the top and bottom rails in this stair rail system.

The 2” x 3 1/2” rails run in between the posts and are set in brackets. The 1 1/4” x 4 1/2” top cap rail is installed on top of the top 2 x 3 1/2” rail.

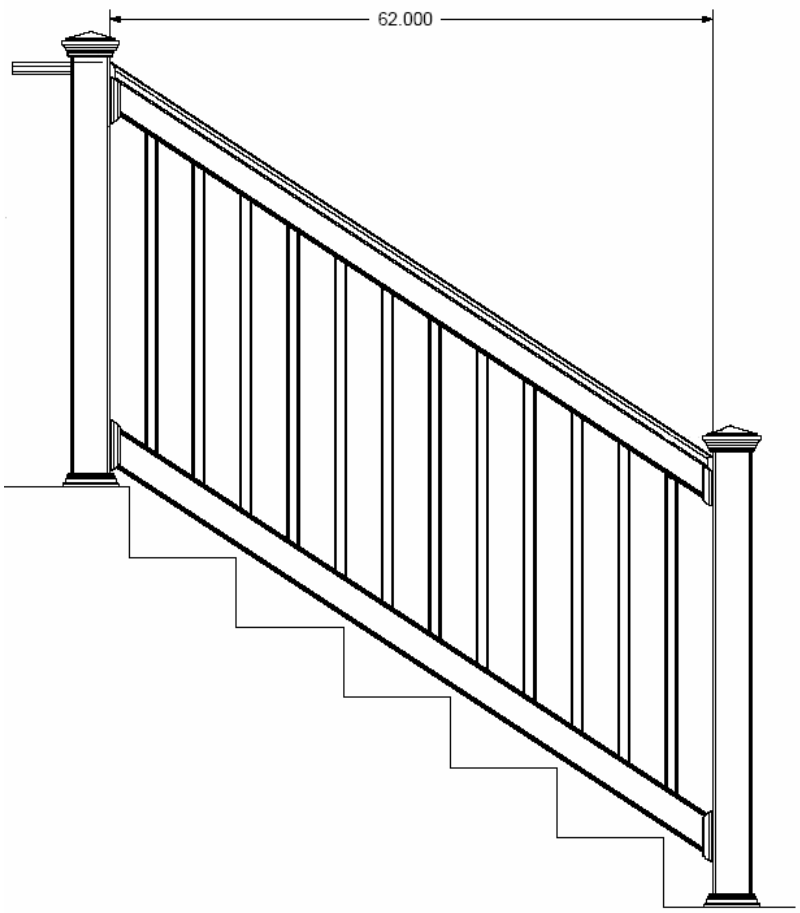

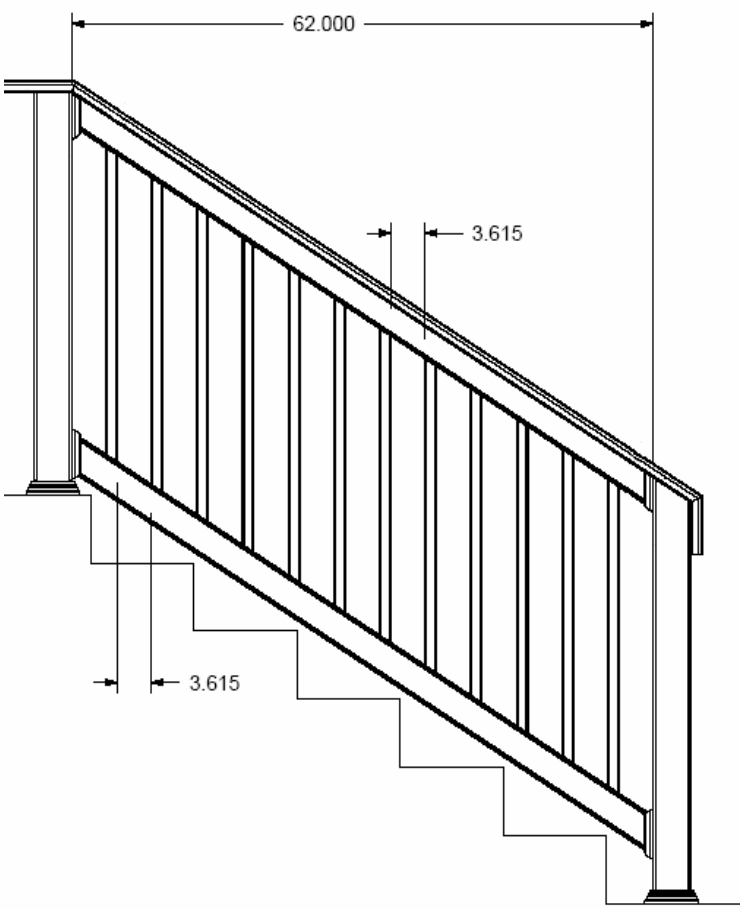

Rail Installation

1) **Determine Top Cap Rail Height.** Determine the desired height of the top cap rail and mark the upper post.

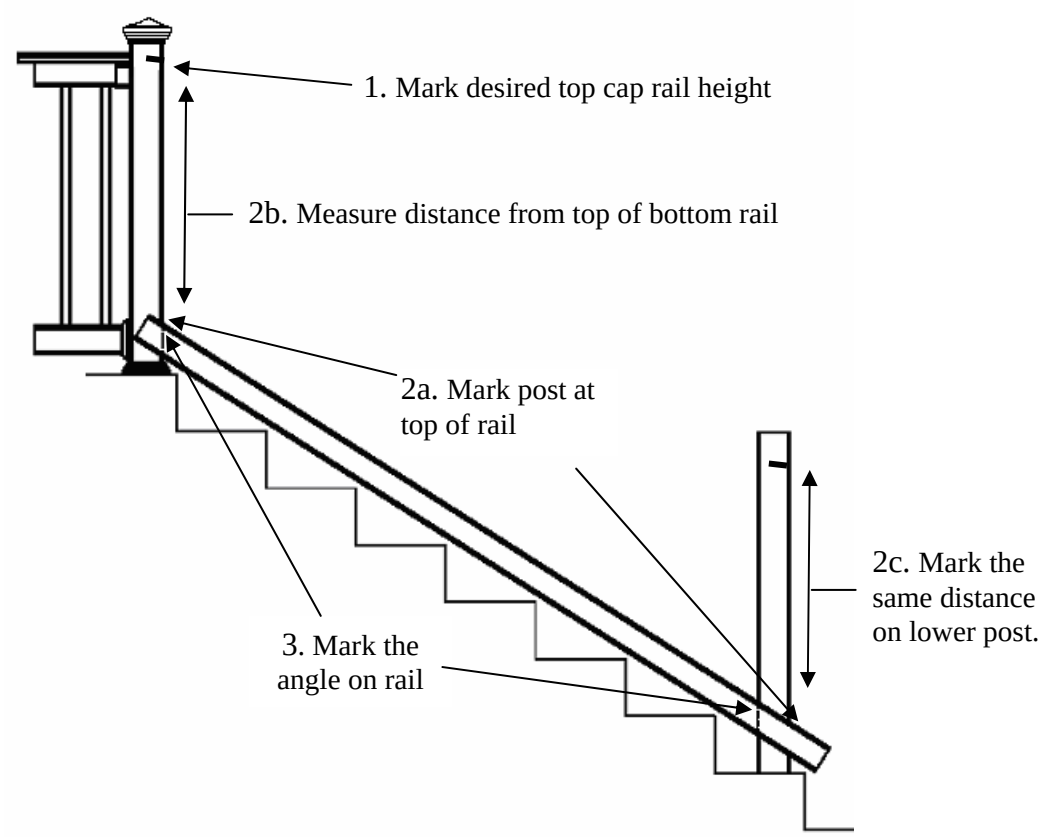

2) **Determine Lower Post Height.** Lay a rail on the stair nose treads. If the post trim is already installed at the base, you may have to raise the rail to clear the trim by placing equal shims between two stair tread noses.
   a. Mark the posts at the top of the rail in the locations shown above.
   b. Measure the distance from the top of the bottom rail to the mark you created in Step 1
   c. Translate the distance you just measured to the lower post.

3) **Determine Rail and Accessories Cut Angles.** To determine the cut angle at each end of your 2 x 3 1/2" top and bottom rail, lay the rails on top of the stair steps with the rails centered between the posts. Mark the angle on each end of the rails, using the posts as a guide. ***It is imperative the posts are square and level***. Make certain the bottom rail is oriented with the routed holes up and top rail is oriented with the routed holes facing down. ***Important: Make sure that there is equal spacing between the picket holes and each end of rails/posts to maintain uniform picket spacing. Do not leave an open picket insert hole at the bracket.***

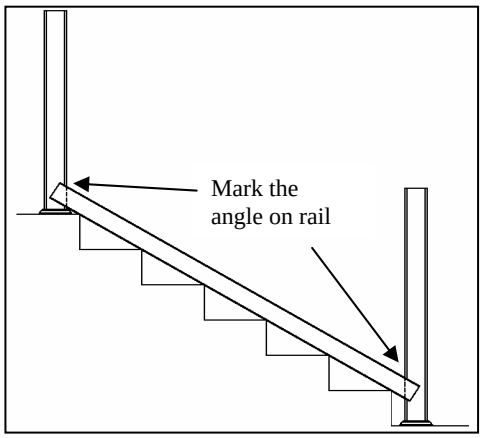

4) **Cut Rails and Accessories.** On both 2” x 3 1/2” rails subtract 1/4” from each mark on each end to allow for the thickness of the mounting bracket. For the bottom rail, insert the 1 1/4” x 1 1/2” aluminum composite insert into the bottom cavity of the 2” x 3 1/2” rail and cut both the rail and insert at the marked angles on each end. For the top rail, insert the 1 1/4” x 1 1/2” aluminum composite insert into the top cavity of the 2” x 3 1/2” rail and cut both the rail and insert at the marked angles on each end. For both top and bottom rails, the inserts should be the same length as the corresponding rails.

5) **Cut Lower Post.** Take a snap line and place one end on the mark created in Step 1. and the other end on the mark created in Step 2c.

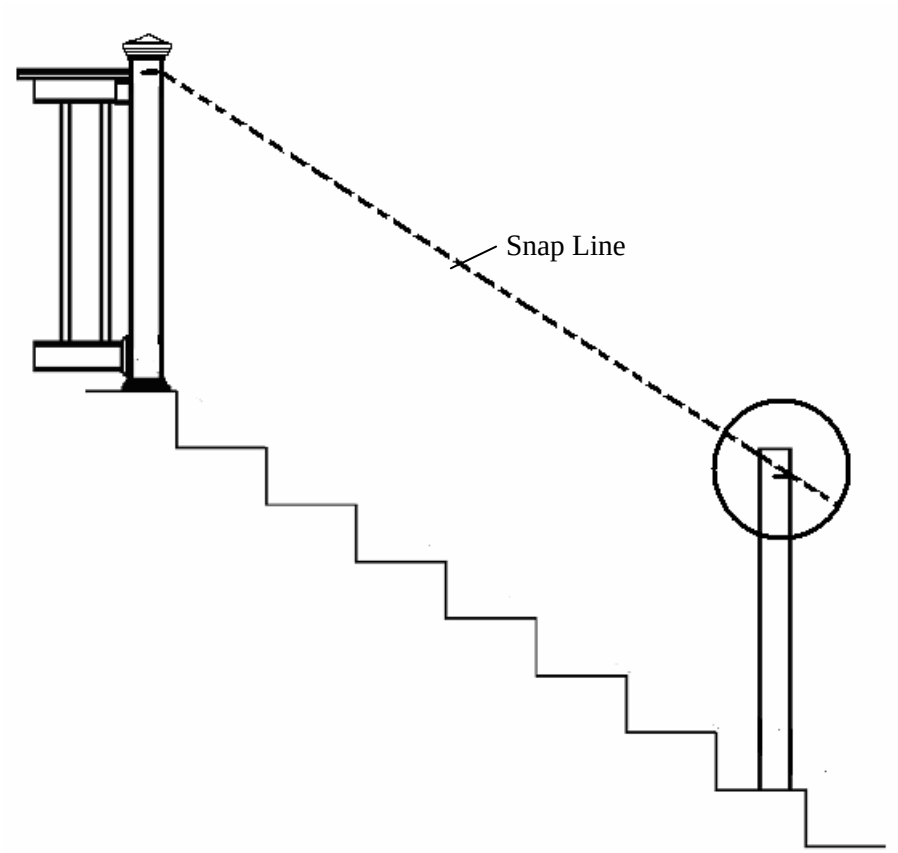

a. **Top-of-Post Installation:** Translate the snap line mark perpendicularly by 1 1/4” to accommodate for the cap rail and determine the post cut line. Cut post using this line.

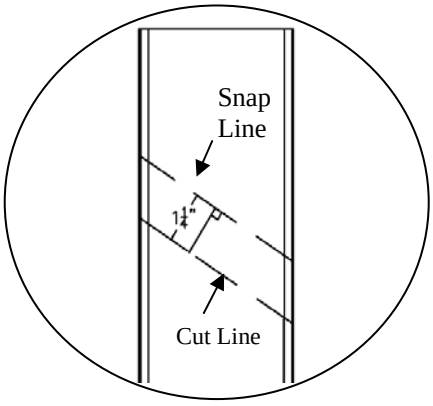

b. **Butted to Post Installation:** Mark the cut line as shown. This cut line will allow room for a post cap. Cut post using this line

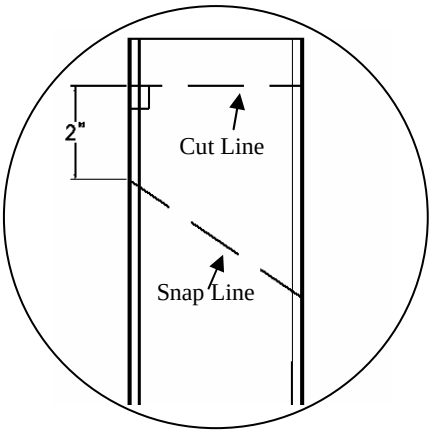

6) **Cut Top Cap Rail Angle.**

a. **Top-of-Post Installation:** Lay the 1 1/4" x 4 1/2" composite top rail on top of the stair steps with the channel facing down and mark the angle at the upper post. Cut the rail at this mark. Make sure the piece is long enough to extend past the lower post.
b. **Butted-to-Post Installation:** Lay the 1 1/4" x 4 1/2" composite top rail on top of the stair steps with the channel facing down and mark the angles at both posts. Cut the rail at these marks.

7) **Install Trim Base.** If using a trim piece, be sure you install the trim base section over the posts before you start attaching the rail sections to the posts.

8) **Determine Top and Bottom Bracket Location.**

a. Insert one picket in the far left hole and another picket in the far right hole of the bottom rail. Now assemble the top rail and position the partial section in place.
b. Lay the top cap rail in place so that the top cap rail is at the desired position against the posts. The drawing below shows a typical Top-of-Post Assembly.
c. Slide the partially assembled section up so that it is snug under the cap rail. You may need to place equal shims between two stair tread noses to elevate bottom rail to keep the assembly snug. Make sure you do not exceed code allowances for spacing in the "tread-rise triangle space".
d. Plumb the two pickets to ensure that the rails are at the correct angles.
e. Mark the posts under the top and bottom rails.

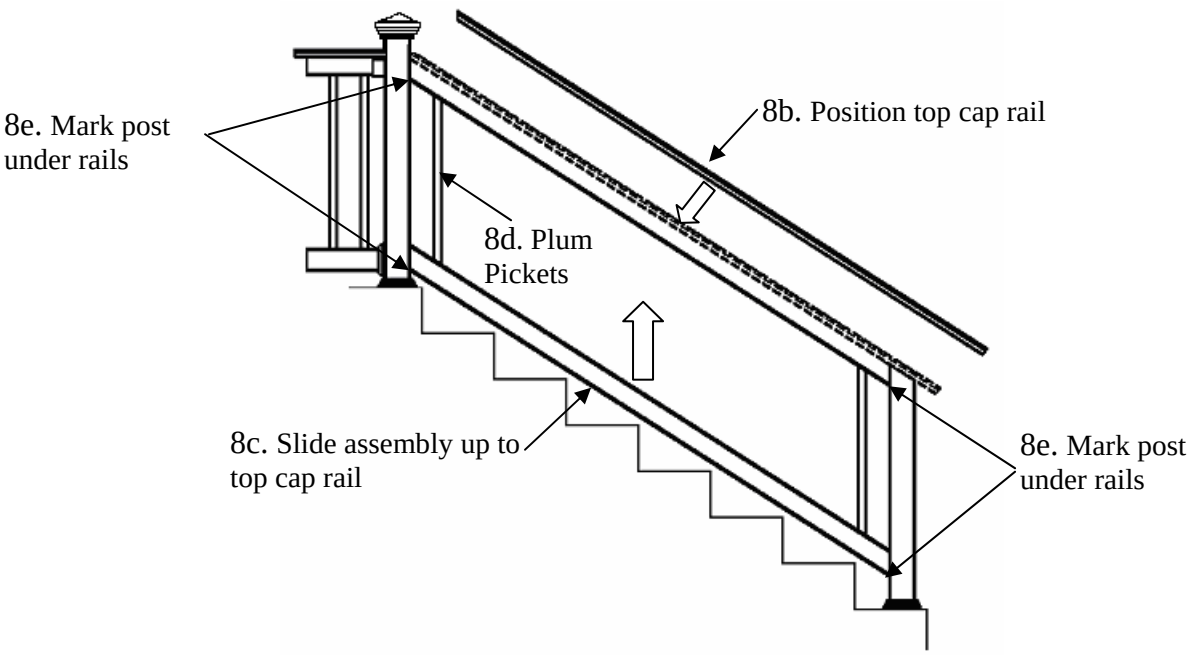

9) **Install Top and Bottom Brackets.** Remove the top cap rail and partial assembly and set aside. Line the bottom of the 2” x 3 1/2” composite stair rail bracket with the line that was marked in the previous step. Center the bracket on the post and pre-drill the post through the four outside holes with a 3/32” bit. Secure the bracket in place using the screws provided. Repeat this step with three remaining brackets.

10) **Install Bottom Rail.** Slide the notched trim covers from the 2” x 3 1/2” stair rail bracket kit onto the bottom rail. Make sure the notch is facing up on the lower location of the rail and facing down at the upper location of the rail. Ensure the 1 1/4” x 1 1/2” aluminum insert is inserted into the bottom cavity of the 2” x 3 1/2” rail. Place the rail on the stair tread noses or the shims you used to mark the bottom rail location. Make sure you do not exceed code allowances for spacing in the “tread-rise triangle space”. ***It is important that the bottom rail is in the same position as in Step 8.*** Install the rail to the stair bracket base at both ends of the bottom rail. This is done by pre-drilling one 3/32” hole through the bottom side hole of the bracket into the rail. Drive one of the screws provided through the hole of the bracket into the rail. Make sure this screw goes into the metal insert. This will provide the mechanical attachment of the rail to the bracket. Make sure the holes for the pickets are facing up. Ensure the rail is at the correct angle and the bracket is centered on the post. Snap trim in place.

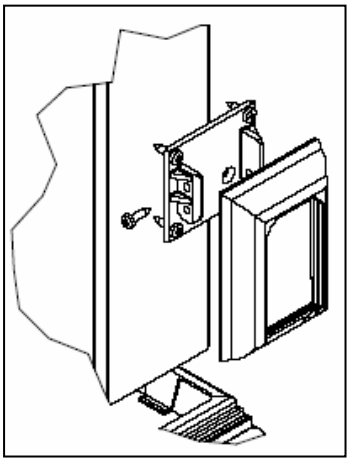

11) **Install Top Rails.**

a. Ensure the 1 1/4” x 1 1/2” aluminum insert is inserted into the top cavity of the 2” x 3 1/2” rail.
b. Put all the pickets into the routed holes in the bottom rail. Feed the pickets one-by-one into the routed holes in the bottom of the top rail until both ends of the top rail are fully seated onto the pickets.
c. Apply a 1/8” bead of Christy’s glue down the center of the inside channel of the 1 1/4” x 4 1/2” composite top rail. Place in the correct position over the top 2” x 3 1/2” rail and slide rail back and forth slightly to distribute the glue. Set the rail in to the correct position and clamp top rail to 2” x 3 1/2” rail with quick-clamps in two places for at least fifteen minutes to allow glue to set up.

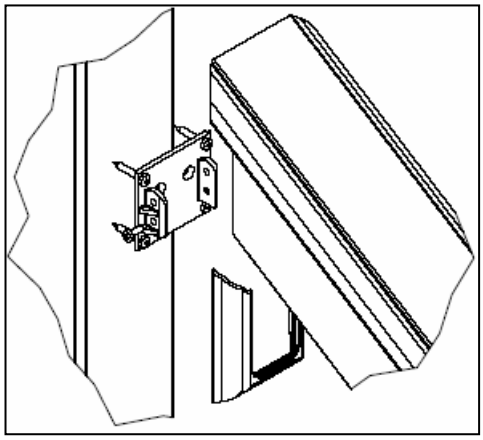

d. Position the glued top rails to desired angle and position and verify that the top rail is parallel to the bottom rail. Ensure the rail is at the correct angle, the bracket is centered on the post, and the pickets are plumb**.** Install the rail to the stair bracket base at both ends of the top rail. This is done by pre-drilling one 3/32” hole through the top side hole of the bracket into the rail. Drive one of the screws provided through the hole of the bracket into the rail. Make sure this screw goes into the metal insert. This will provide the mechanical attachment of the rail to the bracket.

12) **Modify Stair Bracket Trim Covers.** Two 2” x 3 1/2” stair bracket trim covers need to be modified to fit under the top and bottom rails. The trim covers should be cut equal to the stair angles for both ends of the top rail. The trim should be snug up to the top cap rail. Once trims are modified to the desired angle, apply glue to the back tabs and slide into place. You may need to apply tape to allow the glue to set up.

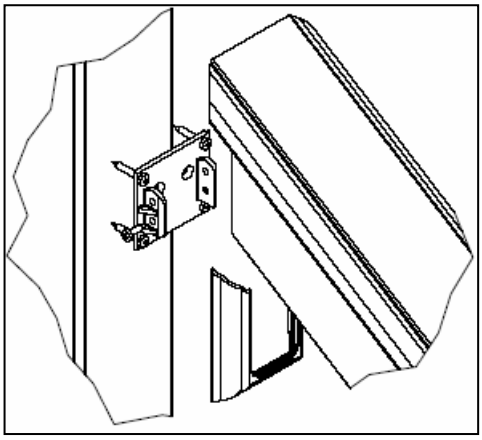

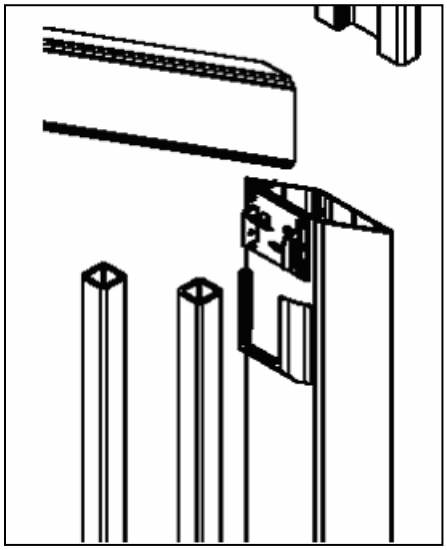

13) **Finish Bottom Post (Top-of-Post Installation only).** To finish off the top cap rail at the bottom post you can leave the rail open and paint the exposed end with matching touch-up paint or you can miter the end with a short piece of the top rail. The short piece can be fastened with glue and/or a tapered head #10 screw. *Remember to pre-drill to prevent splitting*

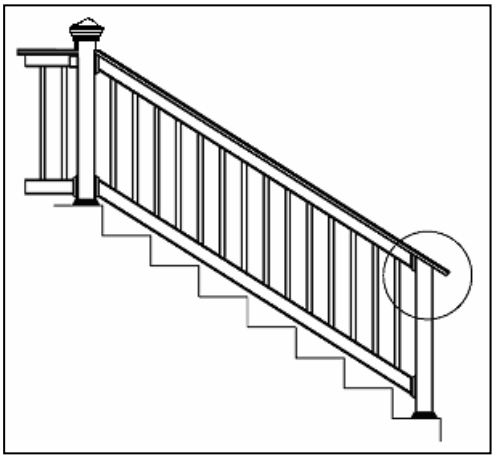

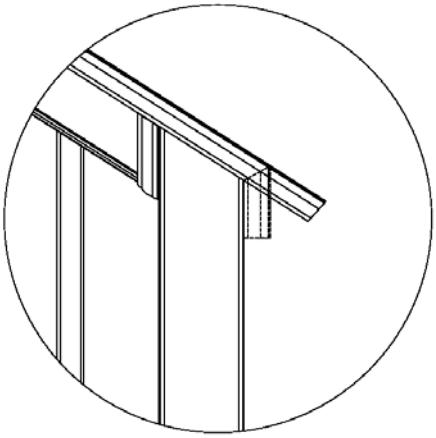

14) **Install Post Cap. (Butted-to-Post Installation only)** Place a 1" x 1/4" wide bead of glue on inside of cap along the center of all four sides. Slide cap onto top of post. The glue will smear as the cap is slid on the post and a permanent bond will take effect after a few minutes. Be careful not to drip glue on the outside of a post or cap or it will cause a "scar".

Cleaning

Your composite railing system is manufactured using a blend of wood and plastic that binds the wood together and provides a coating around the individual wood fibers. An additional vinyl coat is applied to the surface to provide superior weather performance and color retention. For this reason and unlike traditional wood products, it is resistant to paints and penetrating stains. A mild detergent and water should be sufficient to keep the composite railing system looking new. For tough stains, Soft Scrub™ or baking soda works well. If stains or scuff marks appear, use a fiberglass cleaner/glaze or #0000 steel wool and Simple Green™. The surface can be sanded, and a fine sand paper (such as 200 grit) should be used, followed by 400 or 600 grit to polish and restore original finish.

Important

It is the responsibility of the contractor to meet or exceed all code and safety requirements, and to obtain all required building permits. These instructions are only a guide, and may not address every circumstance. The deck and railing installer should determine and implement appropriate installation techniques for each situation. Manufacturer shall not be held liable for improper or unsafe installations

COLONIAL LEVEL RAIL INSTALLATION INSTRUCTIONS

Always check your local building codes before starting a project. Please read assembly instructions completely before beginning construction. Always wear protective goggles & gloves when installing a composite railing system.

2 3/4” x 3 1/4” Composite Contoured Rail Components

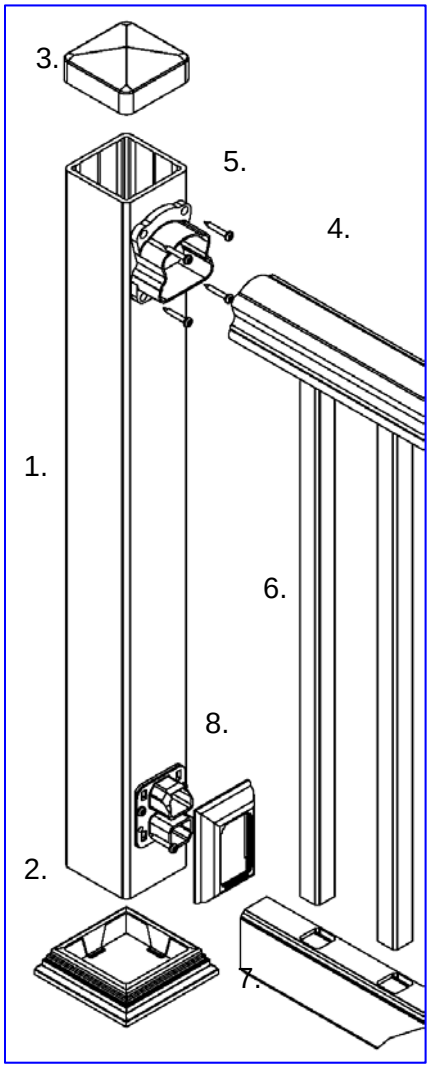

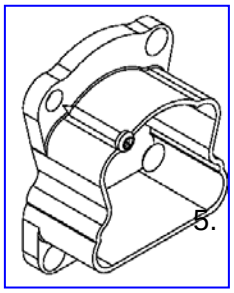

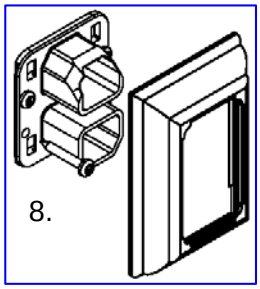

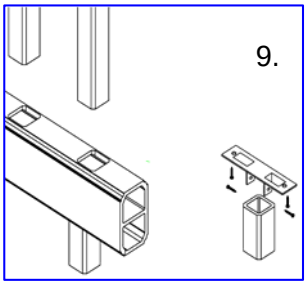

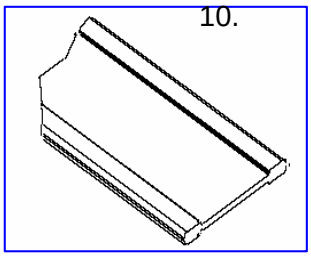

1. 4” x 4” Composite Post (Sold Separately)
2. 4” x 4” Post Trim (Sold Separately)
3. 4” x 4” Post Cap (Sold Separately)
4. 2 3/4” x 3 1/4” Composite Contoured Rail
5. 2 3/4” x 3 1/4” Composite Bracket Kit
6. 1 1/4” x 1 1/4” Composite Pickets
7. 2” x 3 1/2” Composite Rail
8. 2” x 3 1/2” Composite Rail Bracket Kit
9. Foot Block Kit
10. 2 1/4” x 3/16” Aluminum Composite Insert (Required in top rail for an 8’ Contoured Rail System)

Layout

Remember to check local building codes for rail height requirements in your area. The composite railing systems are designed to meet requirements for 36"& 42" high rail systems in residential applications. This is dependent on the post installation methods detailed in the preceding post installation instructions section.

The 2" x 3 1/2" and 2 3/4 x 3 1/4" rails run in between the posts and are set in brackets. The bottom of the railing section is designed to be 2 1/2" above the surface. The foot block is a 1 1/4" x 1 1/4" picket inserted into a metal bracket that is attached to the bottom of the bottom rail.

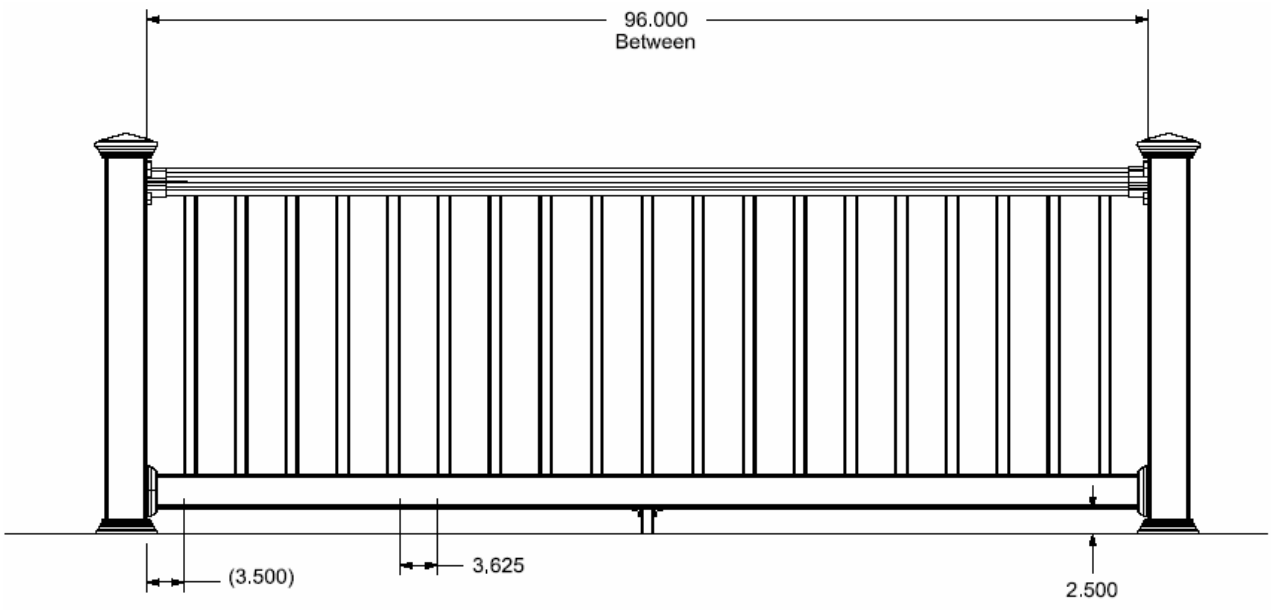

Rail Installation

1) **Cut Rails to Length.** Measure distance between posts and subtract 1/2" to allow room for the brackets (1/4" each end). Mark the rails to the calculated length using a square. ***Important: Make sure that there is equal spacing between the picket hole and end of rail to maintain uniform picket spacing. Do not leave an open picket insert hole at the bracket.*** Trim both ends of the rails.

2) **Install Trim Base.** If using a trim piece, be sure you install the trim base section over the posts before you start attaching the rail sections to the posts.

3) **Attach Foot-Block and Drill Weep Holes.** Cut foot-block picket to the length required for your installation. Attach the foot block bracket to the bottom of the bottom rail and foot-block picket to the bracket using the four screws included in the kit. **Foot block kits are required on all railing sections 6' or longer. When screwing into composite pre-drilling is always recommended.** Drill two or three evenly spaced 1/4" weep holes through the bottom of the bottom rail **and middle rib**. These holes will allow for proper water drainage.

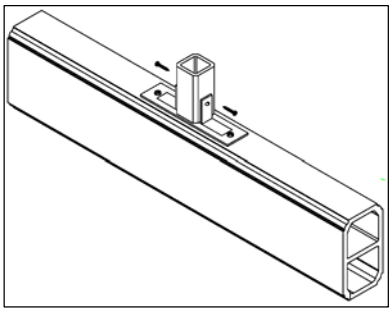

4) **Install Bottom Rail.** Slide trim pieces onto the bottom rail facing the finished trim towards the center of the rail. Insert the 2” x 3 1/2” brackets at both ends the bottom rail. Lower bottom rail (the rail with your weep holes) into position between posts. Make sure the holes for the pickets are facing up. Ensure the rail is level and the bracket is centered on the post. Pre-Drill 3/32” holes into the post through the bracket holes and attach bracket to the post using screws provided in the kit. Snap trim in place.

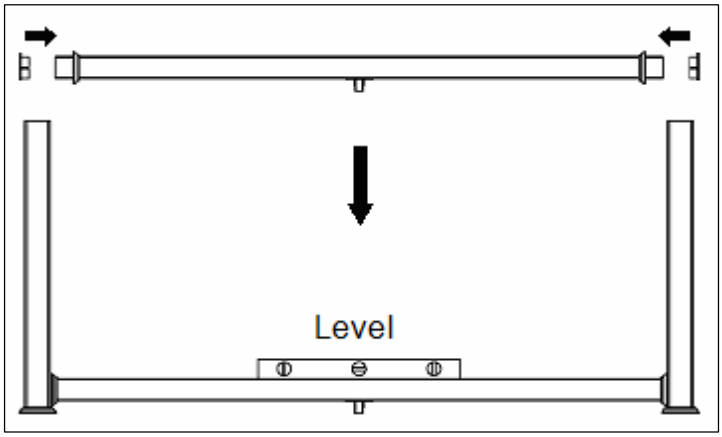

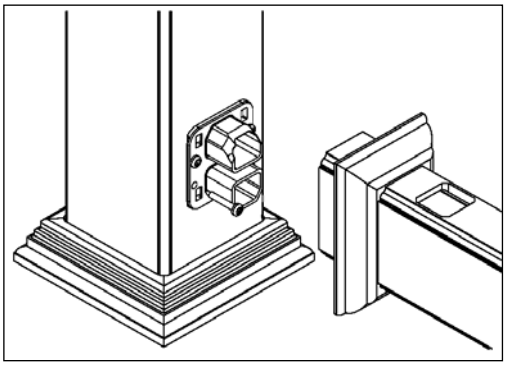

5) **Install Top Brackets and Rail.** Insert all the pickets into the bottom rail. Place a 2 3/4” x 3 1/4” bracket at each end of the top rail and feed the top rail onto the pickets. **(For 8’ rail sections insert the 2 1/4” x 3/16” aluminum insert into the top part of the top rail.)** Once the top of the rail has been seated onto all the pickets and the rail is level, pre-drill 3/32” holes into the post through the bracket holes and attach bracket to the post using screws provided in the kit. Finish off the bracket by gluing the screw hole covers in place. (Note: For corner installations, pre-drill a 3/32”hole through the bottom of the bracket and the bottom part only of the top rail. Insert a screw through the bottom of the rail and bracket.)

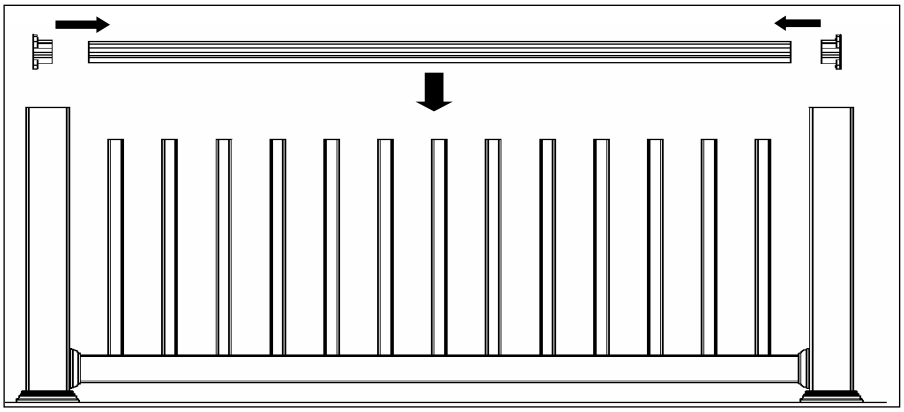

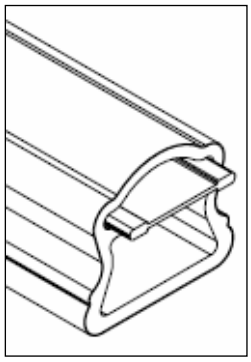

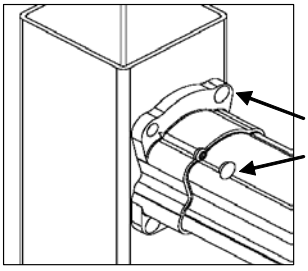

6) **Install Post Cap.** Place a 1” x 1/4” wide bead of glue on inside of cap along the center of all four sides. Slide cap onto top of post. The glue will smear as the cap is slid on the post and a permanent bond will take effect after a few minutes. Be careful not to drip glue on the outside of a post or cap or it will cause a “scar”.

Cleaning

Your composite railing system is manufactured using a blend of wood and plastic that binds the wood together and provides a coating around the individual wood fibers. An additional vinyl coat is applied to the surface to provide superior weather performance and color retention. For this reason and unlike traditional wood products, it is resistant to paints and penetrating stains. A mild detergent and water should be sufficient to keep the composite railing system looking new. For tough stains, Soft Scrub™ or baking soda works well. If stains or scuff marks appear, use a fiberglass cleaner/glaze or #0000 steel wool and Simple Green™. The surface can be sanded, and a fine sand paper (such as 200 grit) should be used, followed by 400 or 600 grit to polish and restore original finish.

Important

It is the responsibility of the contractor to meet or exceed all code and safety requirements, and to obtain all required building permits. These instructions are only a guide, and may not address every circumstance. The deck and railing installer should determine and implement appropriate installation techniques for each situation. Manufacturer shall not be held liable for improper or unsafe installations.

COLONIAL STAIR RAIL INSTALLATION INSTRUCTIONS

Always check your local building codes before starting a project. Please read assembly instructions completely before beginning construction. Always wear protective goggles & gloves when installing a composite railing system.

2 3/4” x 3 1/4” Composite Contoured Stair Rail Components

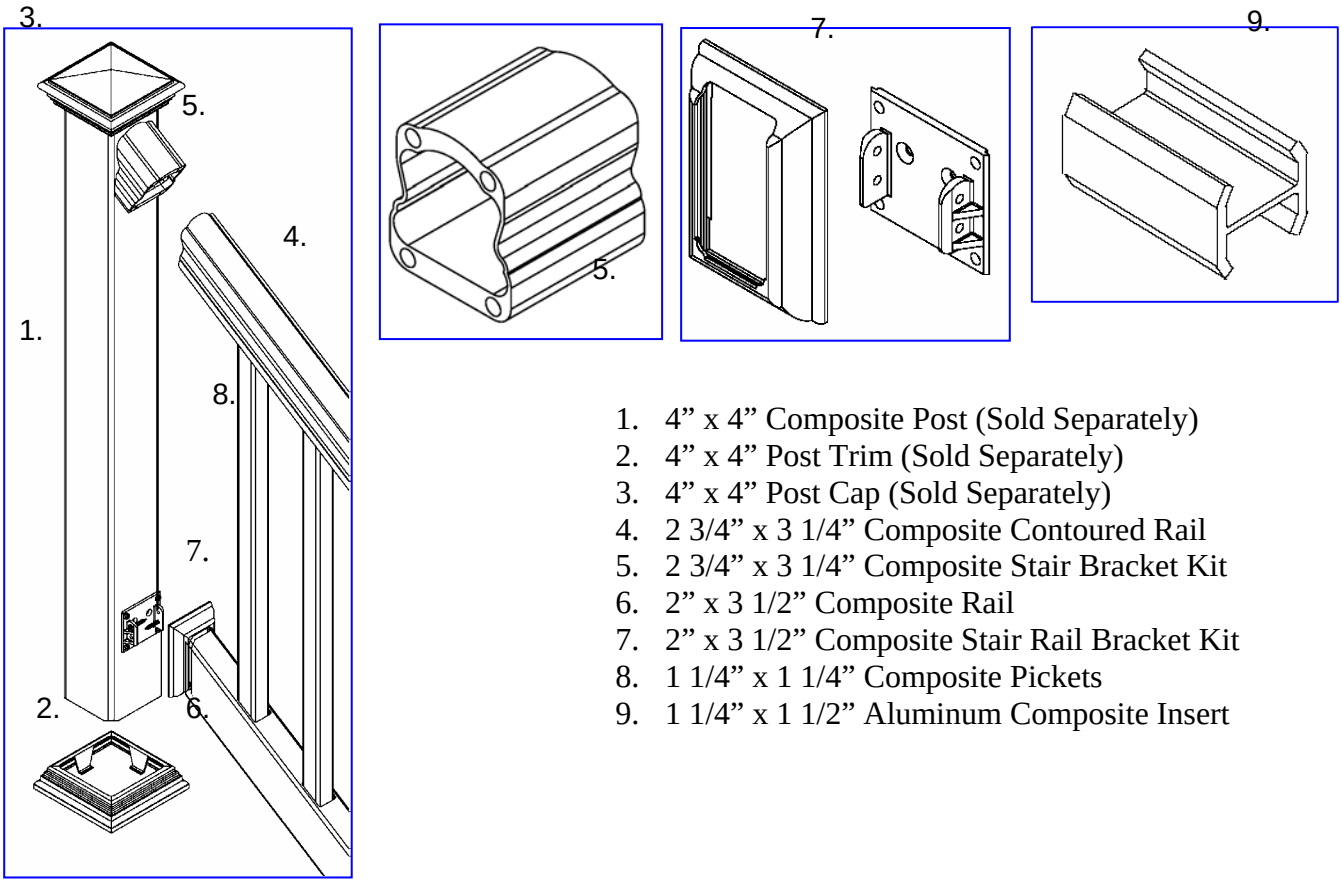

1. 4” x 4” Composite Post (Sold Separately)
2. 4” x 4” Post Trim (Sold Separately)
3. 4” x 4” Post Cap (Sold Separately)
4. 2 3/4” x 3 1/4” Composite Contoured Rail
5. 2 3/4” x 3 1/4” Composite Stair Bracket Kit
6. 2” x 3 1/2” Composite Rail
7. 2” x 3 1/2” Composite Stair Rail Bracket Kit
8. 1 1/4” x 1 1/4” Composite Pickets
9. 1 1/4” x 1 1/2” Aluminum Composite Insert

Layout

Remember to check local building codes for stair rail height requirements in your area. The composite railing systems are designed to meet requirements for 36"& 42" high stair rail systems in residential applications. This is dependent on the stair post installation methods detailed in the preceding post installation instructions section.

The 2 3/4" x 3 1/4" Composite Contoured Stair Rail System is designed for posts set 62" apart and/or a rail length of 72" between posts. The stair systems are designed to accommodate angles up to 35°. An aluminum insert is required in the bottom rail only in this stair rail system.

The 2" x 3 1/2" and 2 3/4 x 3 1/4" rails run in between the posts and are set in brackets.

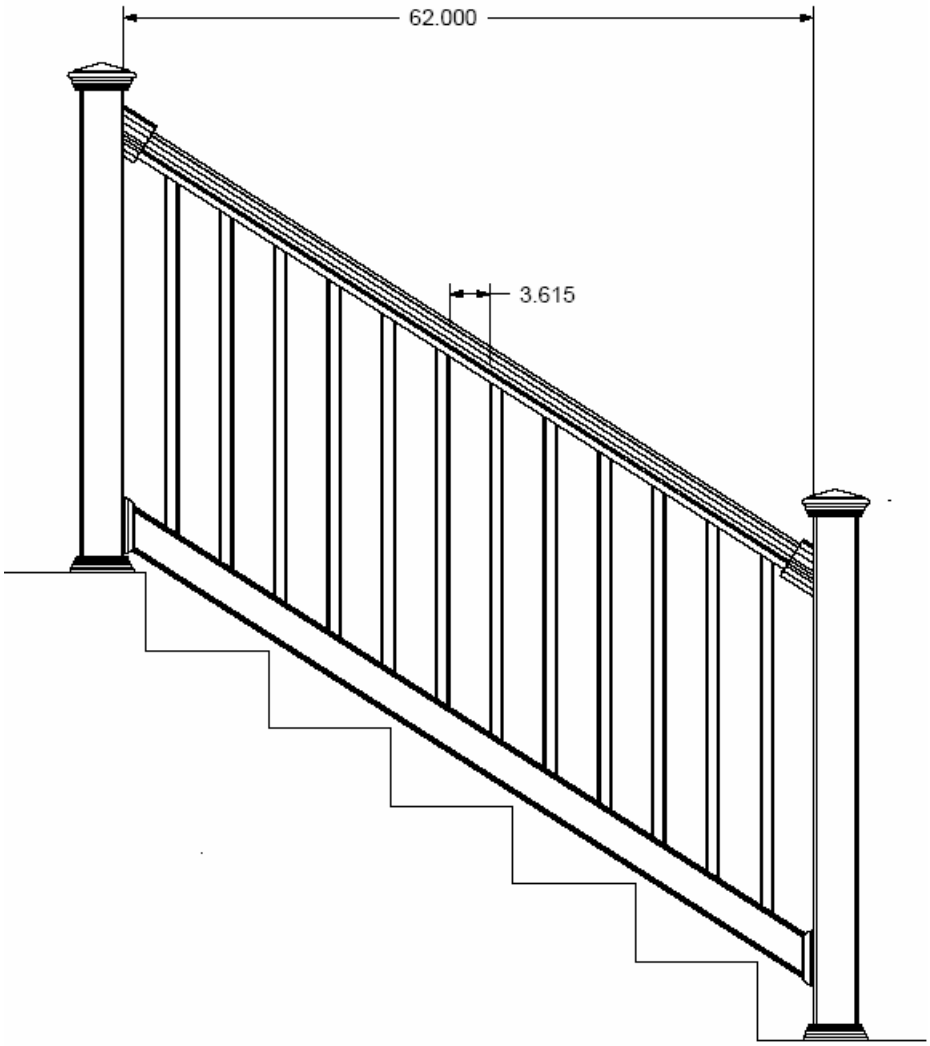

Rail Installation

1) **Determine Rail and Accessories Cut Angles.** Slide a 2 3/4" x 3 1/4" stair bracket over each end of the 2 3/4" x 3 1/4" top rail, such that the counter-bored holes are toward the picket holes in rail. Adjust the bracket position such that it does not cover any portion of the picket/spindle hole. To determine the cut angle at each end of your top and bottom rail, lay the rails on top of the stair steps with the rails centered between the posts. Mark the angle on each end of the rails, using the posts as a guide. ***It is imperative the posts are square and level***. Make certain the bottom rail is oriented with the routed holes up and top rail is oriented with the routed holes facing down. For the 2 3/4" x 3 1/4" top rail**,** mark the angle on each rail bracket using the post as a guide and mark the rail against the bracket to record the bracket location. ***Important: Make sure that there is equal spacing between the picket holes and each end of rails/posts to maintain uniform picket spacing. Do not leave an open picket insert hole at the bracket.***

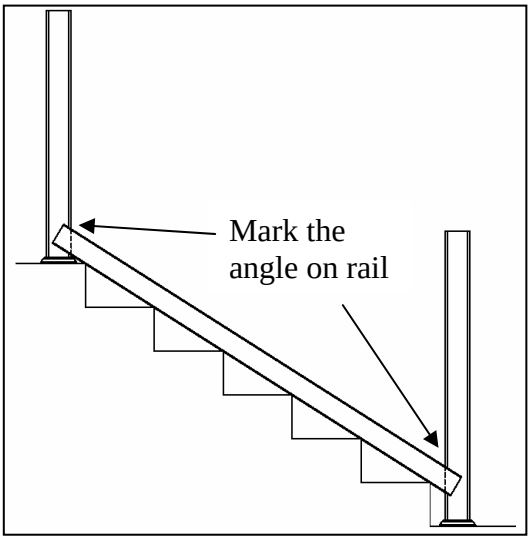

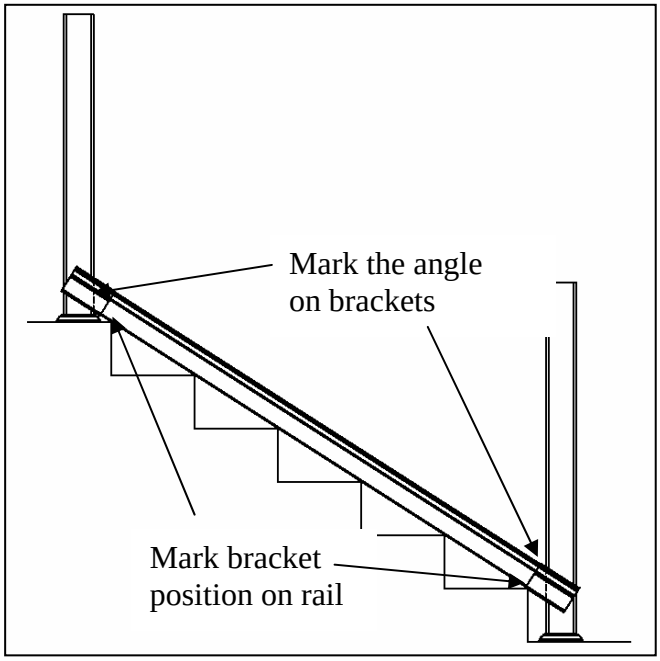

2) **Cut Rails and Accessories.** For the 2" x 3 1/2" bottom rail, subtract 1/4" from each mark on each end to allow for the thickness of the mounting bracket. Insert the 1 1/4" x 1 1/2" aluminum composite insert into the bottom cavity of the 2" x 3 1/2" rail and cut both the rail and insert at the marked angles on each end. For the 2 3/4" x 3 1/4" top rail, make sure the brackets are lined up to the marks you made on the rail in the previous step. Cut the rail and bracket simultaneously at each end using the angled mark you made on the bracket. The bottom rail insert should be the same length as the bottom rail.

3) **Install Trim Base.** If using a trim piece, be sure you install the trim base section over the posts before you start attaching the rail sections to the posts.

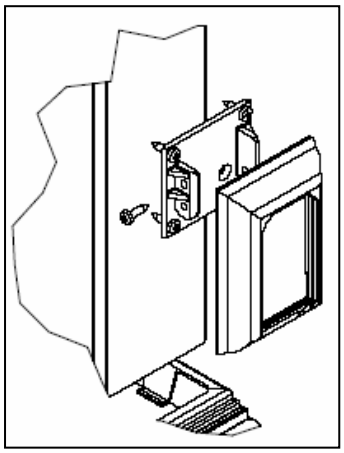

4) **Install Bottom Rail.** Slide the notched trim covers from the 2" x 3 1/2" stair rail bracket kit onto the bottom rail. Make sure the notch in one end of the trim cover is facing up on the lower location of the rail and facing down at the upper location of the rail. Ensure the 1 1/4" x 1 1/2" aluminum insert is inserted into the bottom cavity of the 2" x 3 1/2" rail. Install the stair bracket base at both ends of the bottom rail. This is done by pre-drilling one 3/32" hole through the bottom side hole of the bracket into the rail. Drive one of the screws provided through the hole of the bracket into the rail. Make sure this screw goes into the metal insert. This will provide the mechanical attachment of the rail to the bracket. Lower bottom rail into position between posts. Make sure the holes for the pickets are facing up. Ensure

the rail is at the correct angle and the bracket is centered on the post. You may need to place equal shims between two stair tread noses to elevate the bottom rail. Make sure you do not exceed code allowances for spacing in the "tread-rise triangle space". Pre-Drill 3/32" holes into the post through the bracket holes and attach bracket to the post using screws provided. Snap trim in place.

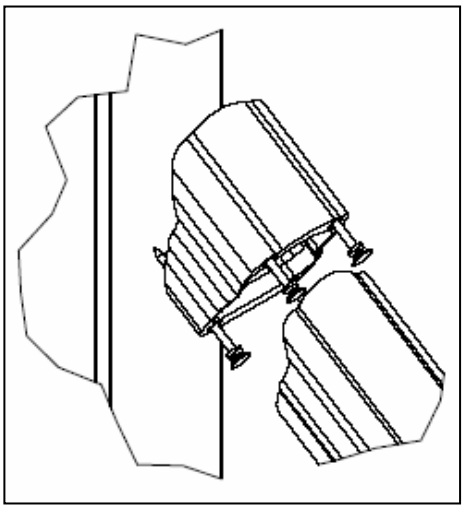

5) **Install Pickets & Top Rail.** Insert all the pickets into the bottom rail. Place the 2 3/4" x 3 1/4" stair brackets, previously cut, at the end of each rail and feed top rail onto the pickets. Ensure the rail is at the correct angle, the brackets are centered on the posts, and the pickets are plumb. Once the top of the rail has been seated onto all the pickets and the rail is at the correct angle, mark the bracket holes on the posts. Remove the top rail. Pre-drill 3/32" holes into the post where marked, estimating the angle of the bracket. Reinstall the top rail and attach the rail with brackets to the posts using screws provided in the kits. Finish off the brackets by gluing the screw hole covers in place.

6) **Install Post Cap.** Place a 1" x 1/4" wide bead of glue on inside of cap along the center of all four sides. Slide cap onto top of post. The glue will smear as the cap is slid on the post and a permanent bond will take effect after a few minutes. Be careful not to drip glue on the outside of a post or cap or it will cause a "scar".

Cleaning

Your composite railing system is manufactured using a blend of wood and plastic that binds the wood together and provides a coating around the individual wood fibers. An additional vinyl coat is applied to the surface to provide superior weather performance and color retention. For this reason and unlike traditional wood products, it is resistant to paints and penetrating stains. A mild detergent and water should be sufficient to keep the composite railing system looking new. For tough stains, Soft Scrub™ or baking soda works well. If stains or scuff marks appear, use a fiberglass cleaner/glaze or #0000 steel wool and Simple Green™. The surface can be sanded, and a fine sand paper (such as 200 grit) should be used, followed by 400 or 600 grit to polish and restore original finish.

Important

It is the responsibility of the contractor to meet or exceed all code and safety requirements, and to obtain all required building permits. These instructions are only a guide, and may not address every circumstance. The deck and railing installer should determine and implement appropriate installation techniques for each situation. Manufacturer shall not be held liable for improper or unsafe installations.